MATERIAL NO.	ENGINEERING NO.	FINISHED LENGTH
1200660162	883030A09M003	0.3M [1FT]
1200660188	883030A09M100	10M [32FT 10 IN]

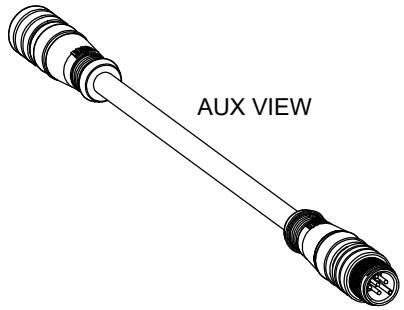

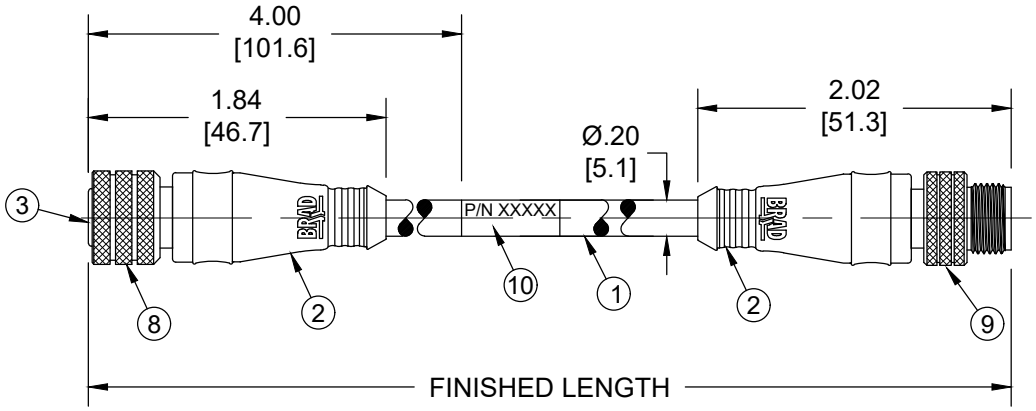

FEMALE FACE VIEW

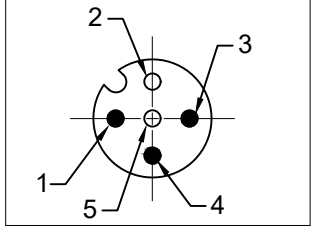

MALE FACE VIEW

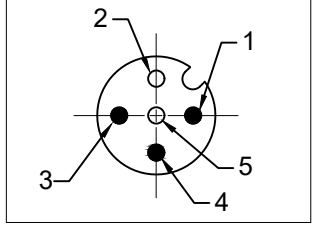

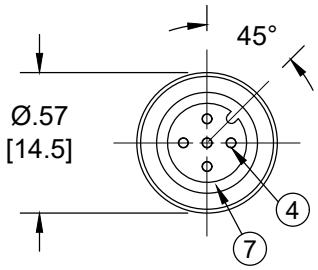

FEMALE FACE VIEW

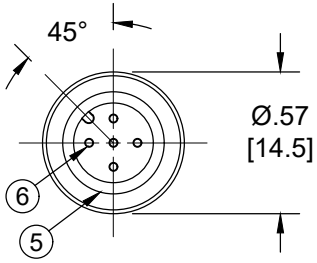

MALE FACE VIEW

NOTES:
1. MATERIAL: AS NOTED
2. FINISH: AS NOTED
3. ELECTRICAL:
   VOLTAGE: 250 VAC/VDC
   CURRENT: 4A
4. TEMP RATING: -20°TO +105°C
5. PROTECTION: IP67 (WHEN MATED)
6. COUPLING THREAD: M12X1
7. UL RECOGNIZED FILE: E152210
   CSA CERTIFIED FILE: LR6837
8. ALL DIMENSIONS ARE FOR REFERENCE
   UNLESS TOLERANCED OR NOTED OTHERWISE

PART NO. MATRIX

883030A09M003

FINISHED LENGTH
M005 = 0.5 METER
M010 = 1 METER
M100 = 10 METER

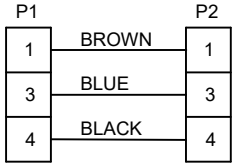

WIRING DIAGRAM

CABLE LENGTH TOLERANCES
<.3M [1FT]: +19mm-0 [+.75in-0]
.3 - .9M [1 - 3FT]: +44.5mm-0 [+1.75in-0]
.9 - 1.8M [3 - 6FT]: +55.6mm-0 [+2.19in-0]
1.8 - 3.7M [6 - 12FT: +88.9mm-0 [+3.50in-0]
3.7 - 7.3M [12 - 24FT]: +165.1mm-0 [+6.50in-0]
7.3-14.6M [24 - 48FT]: +317.5mm-0 [+12.50in-0]
14.6 - 30.5M [48-100FT]: +622.3mm-0 [+24.50in-0]
OVER 30M [100FT] +2% OF FINISHED LENGTH

ITEM	DESCRIPTION	MATERIAL	FINISH
10	WRAP LABEL	VINYL	BLACK/YELLOW
9	MALE COUPLING NUT	BRASS	NICKEL PLATED
8	FEMALE COUPLING NUT	BRASS	NICKEL PLATED
7	O-RING	VITON	RED
6	PIN CONTACT	COPPER ALLOY	GOLD OVER NICKEL
5	MALE INSERT	PUR	BLACK
4	SOCKET CONTACT	COPPER ALLOY	GOLD OVER NICKEL
3	FEMALE INSERT	PUR	BLACK
2	OVERMOLD	PUR	YELLOW
1	#22/5 CABLE	PVC JACKET	YELLOW

DOCUMENT STATUS	P1	RELEASE DATE	2025/08/06 10:03:24

THIS DRAWING CONTAINS INFORMATION THAT IS PROPRIETARY TO MOLEX ELECTRONIC TECHNOLOGIES, LLC AND SHOULD NOT BE USED WITHOUT WRITTEN PERMISSION

FUNCTIONAL SYMBOLS
FA=0
FC=0
FP=0
DIVISIONAL SYMBOLS

DIMENSION UNITS: INCH/MM
SCALE: NTS

GENERAL TOLERANCES (UNLESS SPECIFIED)

	mm	INCH
4 PLACES	±----	±----
3 PLACES	±----	±----
2 PLACES	±----	±----
1 PLACE	±----	±----
0 PLACES	±----	±----
ANGULAR TOL ±	---- °	

DRAFT WHERE APPLICABLE MUST REMAIN WITHIN DIMENSIONS

CURRENT REV DESC: REMOVED OBSOLETED PART NUMBERS AS PER PCN#516685

EC NO:	830097	
DRWN:	SANATK1	2025/07/25
CHK'D:	GGA	2025/08/06
APPR:	GGA	2025/08/06

INITIAL REVISION:

DRWN:	LSTEMMLE	2010/01/25
APPR:	NSTAUDIG	2010/01/29

THIRD ANGLE PROJECTION | DRAWING: A-SIZE | SERIES: 120066

molex

MICRO-CHANGE CORDSET, M12,
3 POLE, FEMALE-MALE, STRAIGHT,
SINGLE KEY, #22/5 AWG

PRODUCT CUSTOMER DRAWING

DOCUMENT NUMBER	DOC TYPE	DOC PART	REVISION
SD-120066-010	PSD	001	A1

MATERIAL NUMBER	CUSTOMER	SHEET NUMBER
SEE CHART	GENERAL MARKET	1 OF 1

FORMAT: IN-ACAD-tb-prod-A
REVISION: B
DATE: 2020/01/14