POLES	MATERIAL NO.	ENGINEERING NO.	FINISHED LENGTH
3	1200660032	NN3031A41M010G	3'3" +2.19"-0 (1M +55.6mm-0)
3	1200660033	NN3031A41M020G	6'7" +3.50"-0 (2M +88.9mm-0)
3	1200660034	NN3031A41M050G	16'5" +6.50"-0 (5M +165.1mm-0)
4	1200660040	NN4031A41M010G	3'3" +2.19"-0 (1M +55.6mm-0)
4	1200660041	NN4031A41M020G	6'7" +3.50"-0 (2M +88.9mm-0)
4	1200660042	NN4031A41M050G	16'5" +6.50"-0 (5M +165.1mm-0)

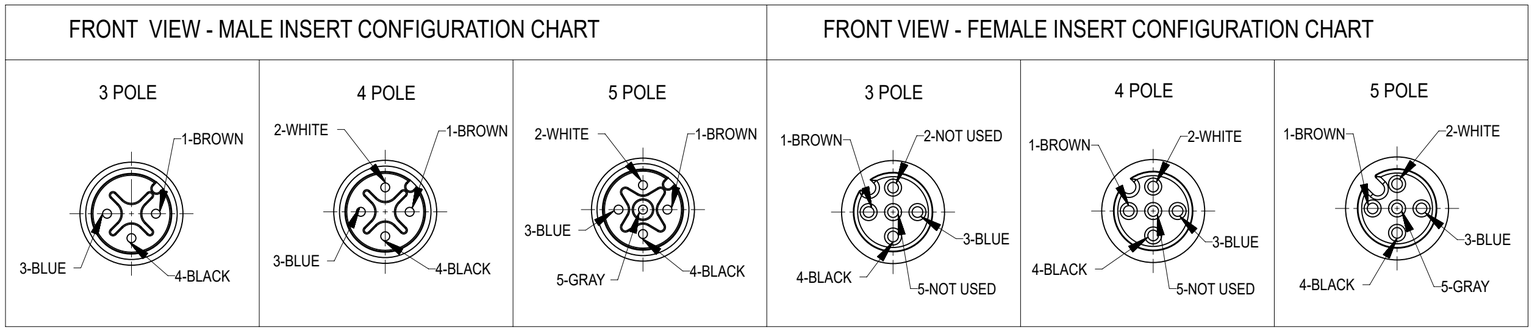

CABLE P/N MATRIX

NNX031A41MXXXG

- DOUBLE ENDED CORDSET
- NUMBER OF POLES
- CONNECTOR STYLE (MALE STR/FEM 90)
- CABLE TYPE (22 AWG BLACK PVC)
- FINISHED LENGTH
  - M00X= .1X METER
  - M010= 1X METER
  - M100= 10X METERS
- BLACK OVERMOLD

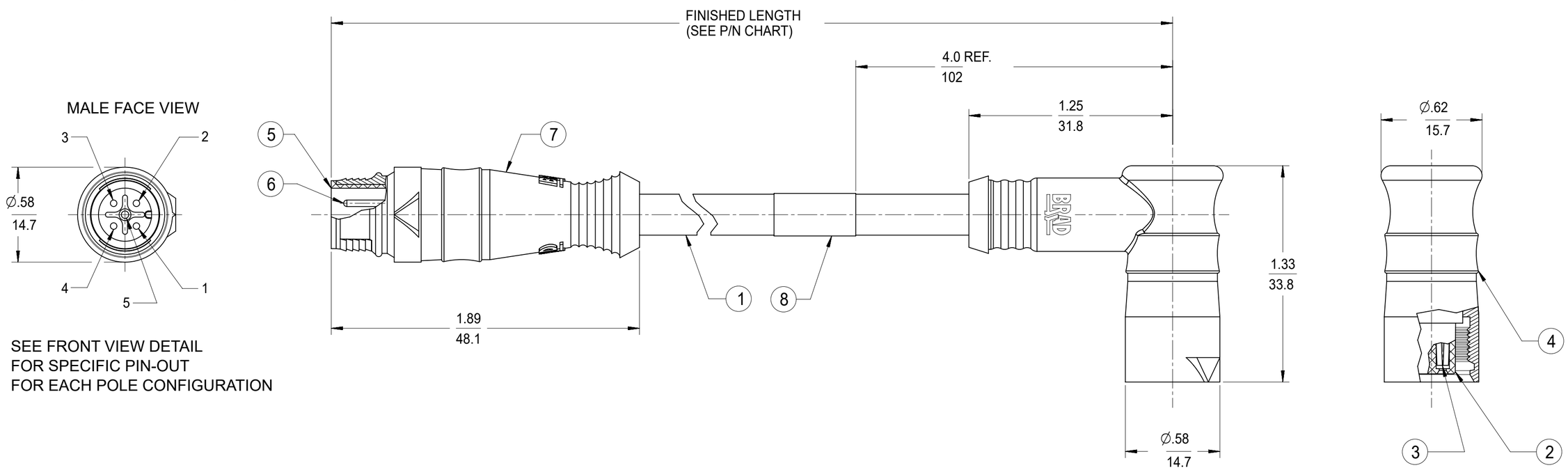

NOTES:
1. MATERIAL: SEE TABLE
2. FINISHES: SEE TABLE
3. ELECTRICAL SPECIFICATIONS
   VOLTAGE RATING: 250V AC/DC
   CURRENT RATING: 4 AMPS
4. XX REFERS TO NUMBER OF CIRCUITS

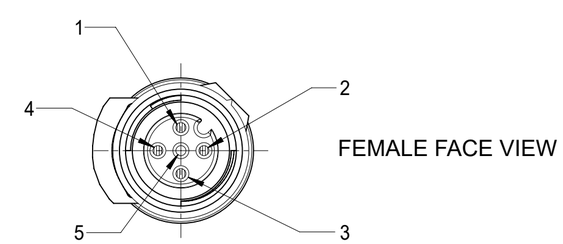

ITEM	QTY.	DESCRIPTION	MATERIAL	FINISH
8	1	WRAP LABEL	VINYL	BLACK/YELLOW
7	1	MICRO-PUSH OVERMOLD (MALE STR)	TPE	BLACK
6	XX	CONTACT PIN	Cu ALLOY	GOLD PLATED
5	1	INSERT (MALE)	NYLON	BLACK
4	1	MICRO-PUSH OVERMOLD (90D FEMALE)	PVC	BLACK
3	XX	CONTACT SOCKET	Cu ALLOY	GOLD PLATED
2	1	INSERT (FEMALE)	NYLON	BLACK
1	A/R	CABLE, 22 AWG, UN SHLD	PVC JACKET	BLACK

DOCUMENT STATUS	P1	RELEASE DATE	2025/10/29 11:38:53

THIS DRAWING CONTAINS INFORMATION THAT IS PROPRIETARY TO MOLEX ELECTRONIC TECHNOLOGIES, LLC AND SHOULD NOT BE USED WITHOUT WRITTEN PERMISSION

DIMENSION UNITS: IN/MM
SCALE: 2:1

GENERAL TOLERANCES (UNLESS SPECIFIED)

	MM	INCH
4 PLACES	±	±
3 PLACES	±	±
2 PLACES	±	± 0.01
1 PLACE	± 0.3	±
0 PLACES	±	±
ANGULAR TOL	± 2.0 °	

DRAFT WHERE APPLICABLE MUST REMAIN WITHIN DIMENSIONS

CURRENT REV DESC: RETRACTED PART NUMBERS AS PER PCN#517405

EC NO: 838760
DRWN: SANATK1 2025/10/13
CHK'D: GGA 2025/10/29
APPR: GGA 2025/10/29

INITIAL REVISION:
DRWN: RSTONE 2015/03/10
APPR: JFMURPHY 2015/03/17

THIRD ANGLE PROJECTION | DRAWING: C-SIZE | SERIES: 120066

molex

MIC PUSH-ON CABLE ASSY
MALE STR TO FEM 90 DEG 22 AWG CABLE

PRODUCT CUSTOMER DRAWING

DOCUMENT NUMBER	DOC TYPE	DOC PART	REVISION
SD-120066-059	PSD	001	A2

MATERIAL NUMBER	CUSTOMER	SHEET NUMBER
SEE P/N CHART	GENERAL MARKET	1 OF 1

FORMAT: Eng-tega-master-tb-prod-C
REVISION: E1
DATE: 2021/05/01