POLES	MATERIAL NO.	ENGINEERING NO.	FINISHED LENGTH
3	1200650048	N03000A41M020G	6'7" +3.50"-0 (2M +88.9mm-0)
3	1200650049	N03000A41M050G	16'5" +6.50"-0 (5M +165.1mm-0)
3	1200650050	N03000A41M100G	32'10" +12.50"-0 (10M +317.5mm-0)
4	1200650053	N04000A41M020G	6'7" +3.50"-0 (2M +88.9mm-0)
4	1200650054	N04000A41M030G	9'10" +3.50"-0 (3M +88.9mm-0)
4	1200650055	N04000A41M050G	16'5" +6.50"-0 (5M +165.1mm-0)
4	1200650056	N04000A41M100G	32'10" +12.50"-0 (10M +317.5mm-0)

FRONT VIEW - FEMALE INSERT CONFIGURATION CHART

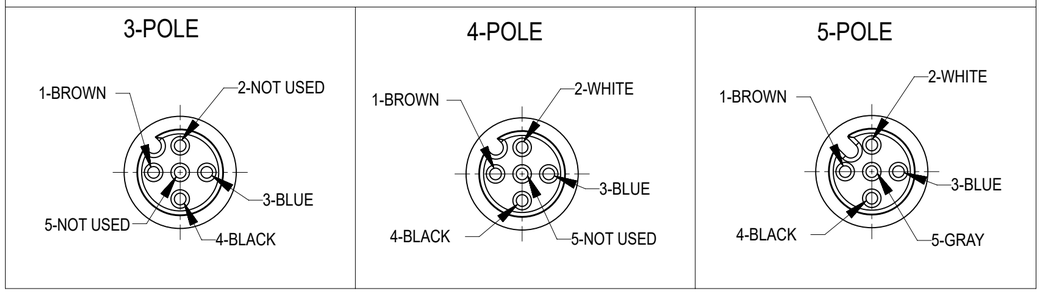

CABLE P/N MATRIX

N0X000A41MXXXG

- SINGLE ENDED CORDSET
- NUMBER OF POLES
- CONNECTOR STYLE (FEMALE SINGLE END)
- CABLE TYPE (22 AWG BLACK PVC)
- FINISHED LENGTH M00X= .1X METER M010= 1X METER M100= 10X METERS
- BLACK OVERMOLD

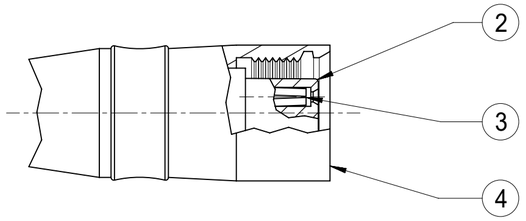

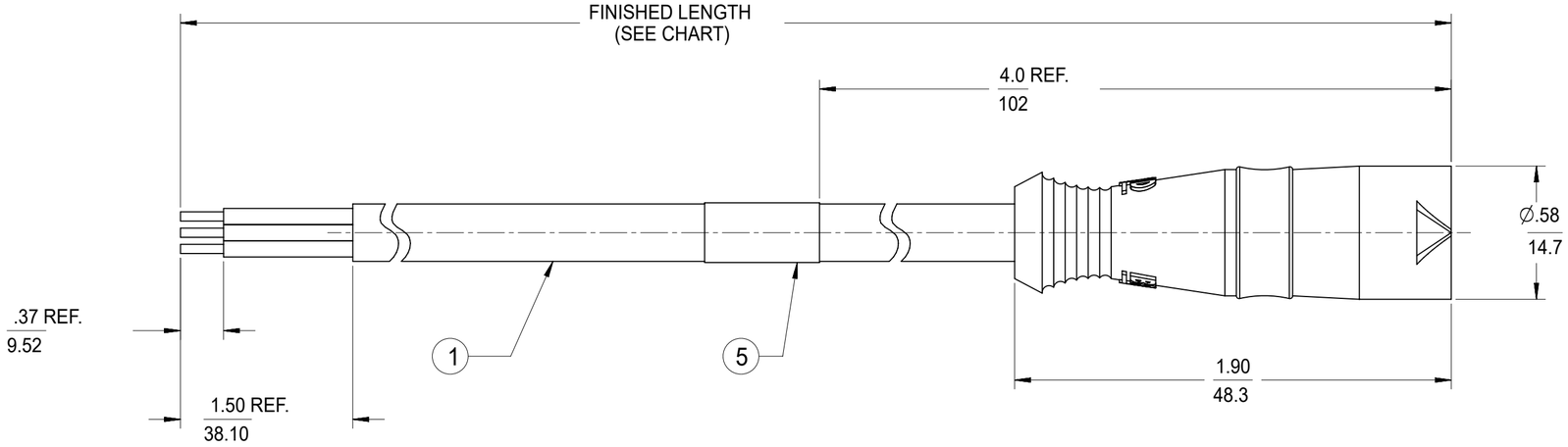

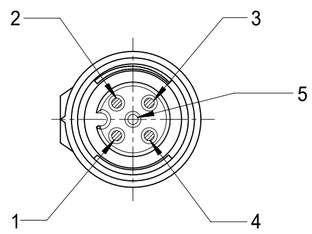

SEE FRONT VIEW DETAIL
FOR SPECIFIC PIN-OUT
FOR EACH POLE CONFIGURATION

NOTES:
1. MATERIAL: SEE TABLE
2. FINISHES: SEE TABLE
3. ELECTRICAL SPECIFICATIONS
   VOLTAGE RATING: 250V AC/DC
   CURRENT RATING: 4 AMPS
4. XX REFERS TO NUMBER OF CIRCUITS

ITEM	QTY.	DESCRIPTION	MATERIAL	FINISH
5	1	WRAP LABEL	VINYL	BLACK/YELLOW
4	1	MICRO-PUSH OVERMOLD	PVC	BLACK
3	XX	CONTACT SOCKET	Cu ALLOY	GOLD PLATED
2	1	INSERT	NYLON	BLACK
1	A/R	CABLE, 22 AWG, UN SHLD	PVC JACKET	BLACK

DOCUMENT STATUS	P1	RELEASE DATE	2025/10/29 11:38:50

THIS DRAWING CONTAINS INFORMATION THAT IS PROPRIETARY TO MOLEX ELECTRONIC TECHNOLOGIES, LLC AND SHOULD NOT BE USED WITHOUT WRITTEN PERMISSION

DIMENSION UNITS: IN/MM
SCALE: 2:1
GENERAL TOLERANCES (UNLESS SPECIFIED)

	MM	INCH
4 PLACES	±	±
3 PLACES	±	±
2 PLACES	±	± 0.01
1 PLACE	± 0.3	±
0 PLACES	±	±
ANGULAR TOL	± 2.0 °	

DRAFT WHERE APPLICABLE MUST REMAIN WITHIN DIMENSIONS

CURRENT REV DESC: RETRACTED PART NUMBERS AS PER PCN#517405

EC NO: 838760
DRWN: SANATK1 2025/10/13
CHK'D: GGA 2025/10/29
APPR: GGA 2025/10/29

INITIAL REVISION:
DRWN: RSTONE 2015/03/09
APPR: JFMURPHY 2015/03/17

THIRD ANGLE PROJECTION | DRAWING: C-SIZE | SERIES: 120065

molex

MIC PUSH-ON CABLE ASSY
FEMALE STRAIGHT 22 AWG CABLE

PRODUCT CUSTOMER DRAWING

DOCUMENT NUMBER	DOC TYPE	DOC PART	REVISION
SD-120065-084	PSD	001	A2

MATERIAL NUMBER	CUSTOMER	SHEET NUMBER
SEE P/N CHART	GENERAL MARKET	1 OF 1

FORMAT: Eng-legs-master-tb-prod-C
REVISION: E1
DATE: 2021/05/21