NOTES:
1. MATERIAL: SEE TABLE
2. FINISH: SEE TABLE
3. ELECTRICAL SPECIFICATIONS
   VOLTAGE RATING PER IEC60664: 300V
   VOLTAGE RATING PER UL2238: 300V
   CURRENT RATING: 8 AMPS
4. TEMP RANGE: -20°C TO +80°C
5. PROTECTION: IP67 (WHEN MATED)
6. CSA CERTIFIED FILE: LR6837
7. ALL DIMS ARE FOR REFERENCE UNLESS TOLERANCED OR NOTED OTHERWISE

(D1) PART NUMBER LEGEND

DNF11XX-M010

FINISHED LENGTH
M005= 0.5 METER
M010= 1 METER
M100= 10 METER

A = ZINC DIECAST
NB = NICKEL PLATED BRASS
SS = STAINLESS STEEL

CABLE LENGTH TOLERANCES
<.3M [1FT]: +19mm-0 [+.75in-0]
.3 - .9M [1 - 3FT]: +44.5mm-0 [+1.75in-0]
.9 - 1.8M [3 - 6FT]: +55.6mm-0 [+2.19in-0]
1.8 - 3.7M [6 - 12FT: +88.9mm-0 [+3.50in-0]
3.7 - 7.3M [12 - 24FT]: +165.1mm-0 [+6.50in-0]
7.3-14.6M [24 - 48FT]: +317.5mm-0 [+12.50in-0]
14.6 - 30.5M [48-100FT]: +622.3mm-0 [+24.50in-0]
OVER 30M [100FT] +2% OF FINISHED LENGTH

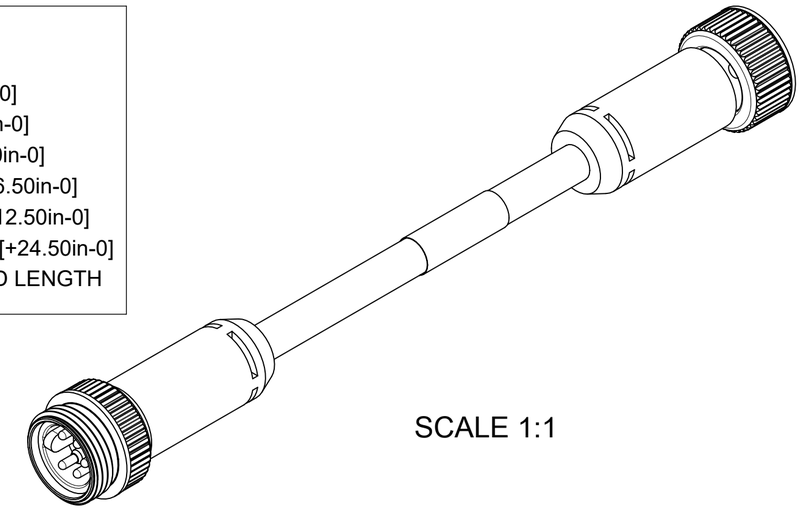

SCALE 1:1

WIRING DIAGRAM

P1		S2
1	DRAIN	1
2	RED +V	2
3	BLACK -V	3
4	WHITE CAN H	4
5	BLUE CAN L	5

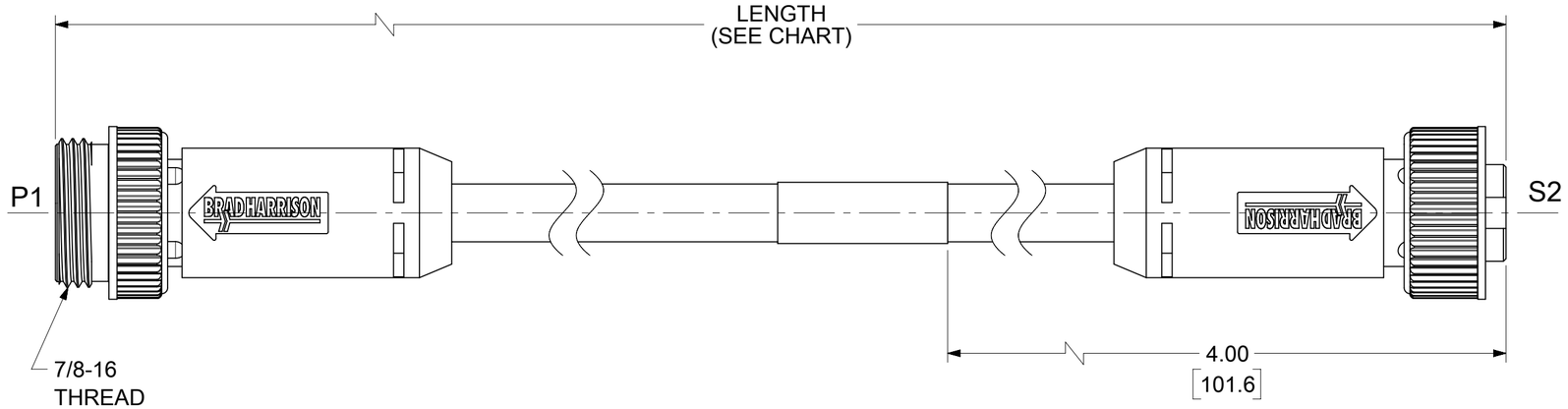

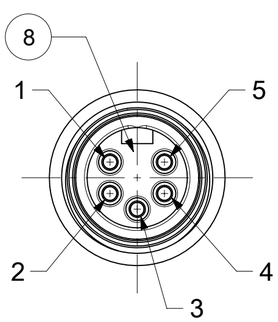

MALE FACE VIEW

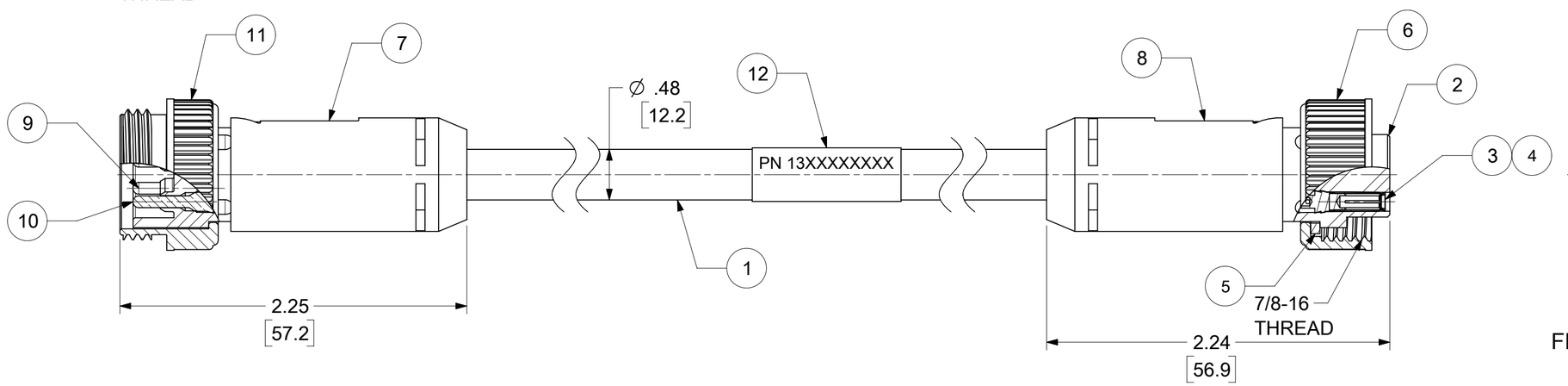

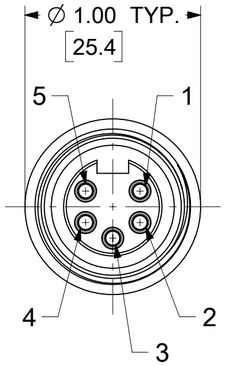

FEMALE FACE VIEW

ITEM	DESCRIPTION	MATERIAL	FINISH	
12	WRAP LABEL	VINYL	BLACK/YELLOW	
11	COUPLING NUT, MALE	SEE P/N LEGEND	SEE P/N LEGEND	(D1)
10	CONTACT PIN, 18 AWG	COPPER ALLOY	GOLD PLATED	
9	CONTACT PIN, 16 AWG	COPPER ALLOY	GOLD PLATED	
8	INSERT, MALE, 5 POLE	TPE	BLACK	
7	OVERMOLD	TPE	GRAY	
6	COUPLING NUT, FEMALE	SEE P/N LEGEND	SEE P/N LEGEND	(D1)
5	FRICTION RING	NYLON	WHITE	
4	CONTACT SOCKET, 18 AWG	COPPER ALLOY	GOLD PLATED	
3	CONTACT SOCKET , 16 AWG	COPPER ALLOY	GOLD PLATED	
2	INSERT, FEMALE, 5 POLE	TPE	BLACK	
1	CABLE - FLEX, DEV-NET, TRUNK, 18/2, 15/2	TPE JACKET	GRAY	

MATERIAL NO.	ENGINEERING NO.	FINISHED LENGTH
1300250404	DNF11A-M003	11.8 IN (0.3M)
(D1) 1300250447	DNF11NB-M012	3 FT 11.2 IN (1.2M)
1300250435	DNF11A-M300	98 FT 5.1 IN (30M)
1300250579	DNF11A-M600	196 FT 10.2 IN (60M)

DOCUMENT STATUS	P1	RELEASE DATE	2024/02/01 20:33:29

FUNCTIONAL SYMBOLS
FA = 0
FC = 0
FP = 0
DIVISIONAL SYMBOLS

THIS DRAWING CONTAINS INFORMATION THAT IS PROPRIETARY TO MOLEX ELECTRONIC TECHNOLOGIES, LLC AND SHOULD NOT BE USED WITHOUT WRITTEN PERMISSION

DIMENSION UNITS: INCH/MM
SCALE: 1.5:1

GENERAL TOLERANCES (UNLESS SPECIFIED)

	MM	INCH
4 PLACES	±	±
3 PLACES	±	±
2 PLACES	±	±
1 PLACE	±	±
0 PLACES	±	±
ANGULAR TOL	± °	

DRAFT WHERE APPLICABLE MUST REMAIN WITHIN DIMENSIONS

CURRENT REV DESC: LINKED DNF11NB & DNF11SS SERIES TO DRAWING AND MODIFIED P/N LEGEND AND MATERIALS IN THE BOM TABLE.

EC NO: 775569
DRWN: VBASUTHKARP 2024/01/30
CHK'D: PDODDAMANEMY 2024/02/01
APPR: BWOODMAN 2024/02/01

INITIAL REVISION:
DRWN: BRUPERT 2009/07/17
APPR: JFMURPHY 2009/07/20

THIRD ANGLE PROJECTION
DRAWING: C-SIZE
SERIES: 130025

molex

MINI-CHANGE CORDSET, A SIZE, 5 POLE
MALE-FEMALE, STRAIGHT, SINGLE KEY, 15/18 AWG
DEV-NET TRUNK CABLE

PRODUCT CUSTOMER DRAWING

DOCUMENT NUMBER	DOC TYPE	DOC PART	REVISION
SD-130025-015	PSD	001	D1

MATERIAL NUMBER	CUSTOMER	SHEET NUMBER
SEE TABLE	GENERAL MARKET	1 OF 1

*FORMAT: Eng-legal-master-tb-prod-C
REVISION: E
DATE: 2020/01/14