MATERIAL NO.	ENGINEERING NO.	FINISHED LENGTH
1300240145	DNB01A-M005	0.5M (1 FT 7.70 IN)
1300240392	DNB01A-M280	28M (91 FT 10.35 IN)
1300240384	DNB01A-M700	70M (229 FT 7.90 IN)

C

PART NUMBER LEGEND

DNB01A-M010

FINISHED LENGTH
M005= 0.5 M
M010= 1 M
M100= 10M

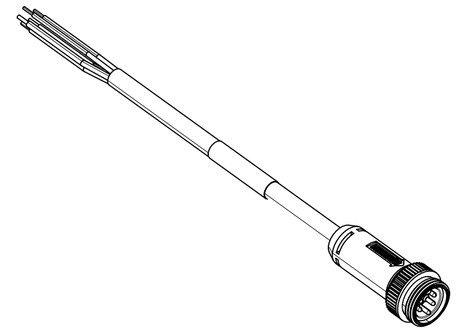

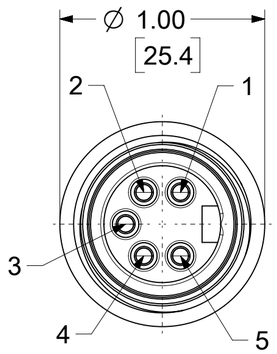

MALE FACE VIEW

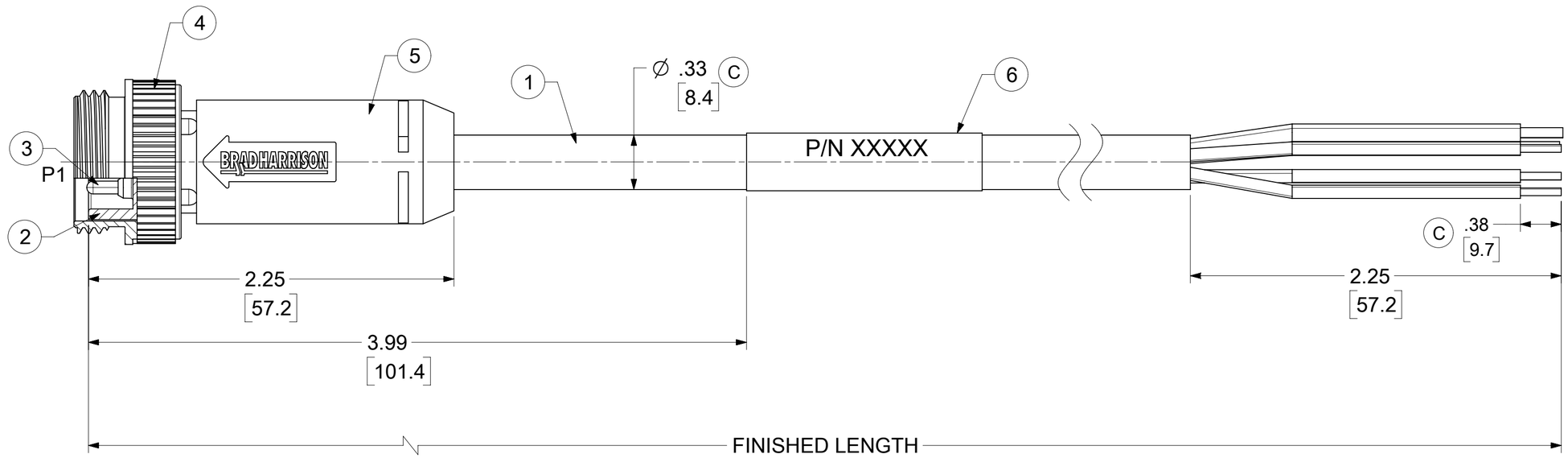

WIRING DIAGRAM

P1

1	DRAIN
2	RED
3	BLACK
4	WHITE
5	BLUE

NOTES:
1. MATERIAL: AS NOTED
2. FINISH: AS NOTED
3. ELECTRICAL:
   VOLTAGE: 300V PER IEC60664 C
   300V PER UL
   CURRENT: 4A
4. TEMP RATING: -20°C TO +80°C
5. COUPLING THREAD: 7/8"-16UN
6. PROTECTION: IP67 (WHEN MATED)
7. CSA CERTIFIED FILE: LR6837 C
8. ALL DIMS ARE FOR REFERENCE UNLESS TOLERANCED OR NOTED OTHERWISE

C

CABLE LENGTH TOLERANCES
<.3M [1FT]: +19mm-0 [+.75in-0]
.3 - .9M [1 - 3FT]: +44.5mm-0 [+1.75in-0]
.9 - 1.8M [3 - 6FT]: +55.6mm-0 [+2.19in-0]
1.8 - 3.7M [6 - 12FT: +88.9mm-0 [+3.50in-0]
3.7 - 7.3M [12 - 24FT]: +165.1mm-0 [+6.50in-0]
7.3-14.6M [24 - 48FT]: +317.5mm-0 [+12.50in-0]
14.6 - 30.5M [48-100FT]: +622.3mm-0 [+24.50in-0]
OVER 30M [100FT] +2% OF FINISHED LENGTH

ITEM	DESCRIPTION	MATERIAL	FINISH	
6	WRAP LABEL	VINYL	BLACK/YELLOW	
5	OVERMOLD	TPE	GRAY	C
4	COUPLING NUT	ZINC DIE CAST	BLACK E-COAT	
3	PIN CONTACT	Cu ALLOY	GOLD PLATED	
2	MALE INSERT	TPE	BLACK	C
1	CABLE, DEV-NET, MID, 20/2, 16/2	PVC JACKET	GRAY	

DOCUMENT STATUS	P1	RELEASE DATE	2025/03/06 18:28:02

THIS DRAWING CONTAINS INFORMATION THAT IS PROPRIETARY TO MOLEX ELECTRONIC TECHNOLOGIES, LLC AND SHOULD NOT BE USED WITHOUT WRITTEN PERMISSION

FUNCTIONAL SYMBOLS
FA = 0
FC = 0
FP = 0
DIVISIONAL SYMBOLS

DIMENSION UNITS: INCH/MM
SCALE: NTS

GENERAL TOLERANCES (UNLESS SPECIFIED)

	MM	INCH
4 PLACES	±	±
3 PLACES	±	±
2 PLACES	±	±
1 PLACE	±	±
0 PLACES	±	±
ANGULAR TOL	± °	

DRAFT WHERE APPLICABLE MUST REMAIN WITHIN DIMENSIONS

CURRENT REV DESC: ITEM 2 & 5 WERE PVC, ADDED TOLERANCE TABLE, CABLE DIA, CSA, MODIFIED VOLT, MATERIAL TABLE & DIMS.

EC NO: 732099
DRWN: VBASUTHKARP 2022/07/12
CHK'D: PDODDAMANEMY 2024/03/28
APPR: BWOODMAN 2025/03/06

INITIAL REVISION:
DRWN: RSTONE 2016/12/20
APPR: JFMURPHY 2009/07/20

THIRD ANGLE PROJECTION

molex

MINI-CHANGE DEVICENET, A-SIZE
5 POLE, MALE, STRAIGHT, SINGLE KEY, 16/20 AWG

PRODUCT CUSTOMER DRAWING

DOCUMENT NUMBER	DOC TYPE	DOC PART	REVISION
SD-130024-005	PSD	001	C

DRAWING	SERIES	MATERIAL NUMBER	CUSTOMER	SHEET NUMBER
C-SIZE	130024	SEE TABLE	GENERAL MARKET	1 OF 1