NOTE

1. MATERIAL : WAFER : NYLON66, GLASS FILLED 20%
   PIN : BRASS, TIN PLATED

2. LEGEND

   35313-** 6 *

   COLOR : 0 - NATURAL
   1 - BLACK
   2 - RED
   3 - YELLOW
   4 - BLUE

   CKT NO.(02,03,04...)

3. THIS PRODUCT SHALL BE COMPLIED WITH RoHS COMPATIBLE(LEAD FREE SOLDERABILITY)

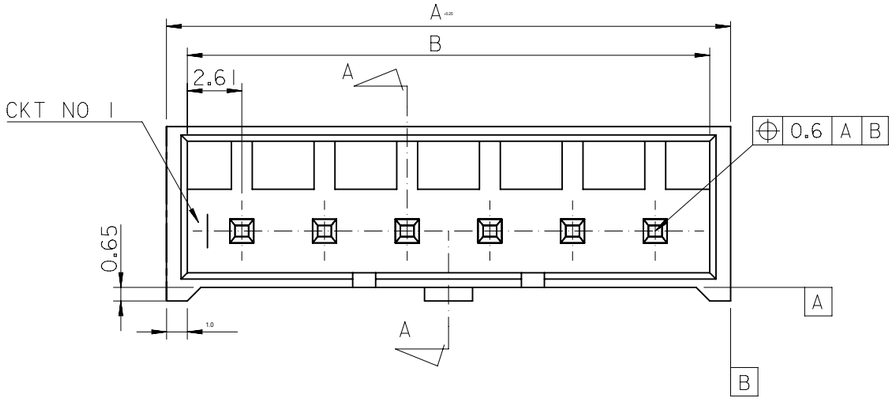

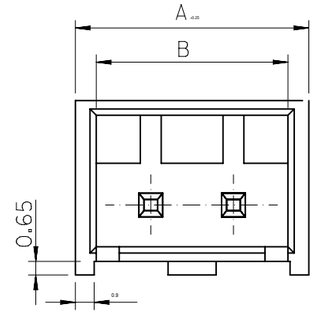

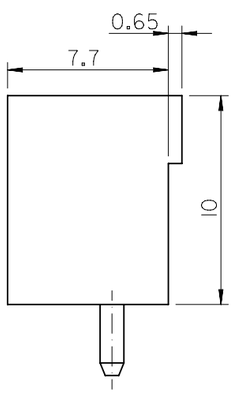

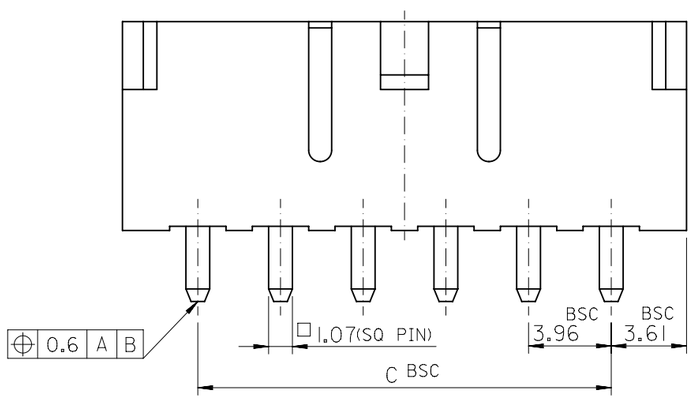

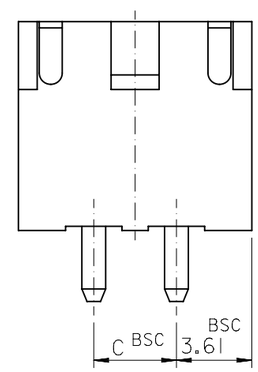

2 CKT ONLY

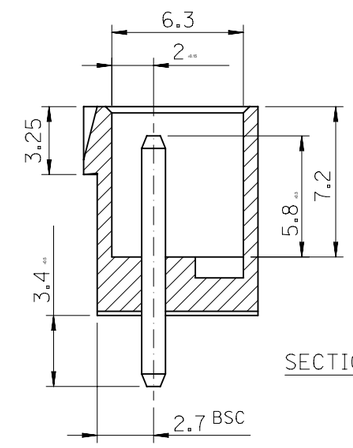

SECTION A-A

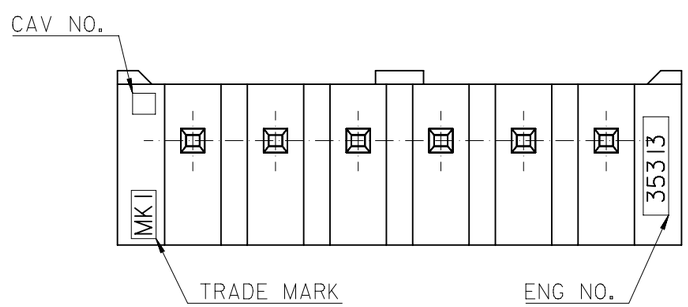

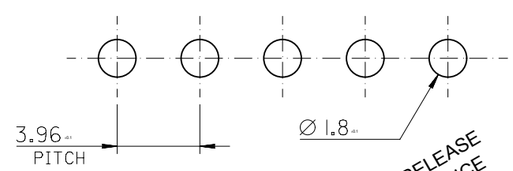

P.C.BOARD LAYOUT
THK. : 1.6T

PRE-RELEASE REFERENCE USE ONLY

C	B	A	ENG NO.	CKT NO.
27.72	32.94	34.94	35313-086*	8
23.76	28.98	30.98	-076*	7
19.8	25.02	27.02	-066*	6
15.84	21.06	23.06	-056*	5
11.88	17.1	19.1	-046*	4
7.92	13.14	15.14	-036*	3
3.96	9.18	11.18	35313-026*	2

FUNCTIONAL SYMBOLS
EA = 0
EC = 0
EP = 0
DIVISIONAL SYMBOLS

THIS DRAWING CONTAINS INFORMATION THAT IS PROPRIETARY TO MOLEX ELECTRONIC TECHNOLOGIES, LLC AND SHOULD NOT BE USED WITHOUT WRITTEN PERMISSION

DIMENSION UNITS: mm
SCALE: 3.5:1

GENERAL TOLERANCES (UNLESS SPECIFIED)

	MM	INCH
4 PLACES	± 0.0	±
3 PLACES	± 0.0	±
2 PLACES	± 0.2	±
1 PLACE	± 0.2	±
0 PLACES	±	±
ANGULAR TOL	± °	

DRAFT WHERE APPLICABLE MUST REMAIN WITHIN DIMENSIONS

CURRENT REV DESC: OBSOLETED PART NUMBERS AS PER PCN#510806

EC NO: 733771
DRWN: ANIKES1 2023/01/16
CHK'D: GGA 2023/02/24
APPR: GGA 2023/02/24

INITIAL REVISION:
DRWN: KSKIM 2004/10/11
APPR: CHANGWOOLEE 2004/10/12

THIRD ANGLE PROJECTION | DRAWING: B-SIZE | SERIES: 35313

molex

3.96 PITCH W/B CONN.
WAFER ASS

PRODUCT CUSTOMER DRAWING

DOCUMENT NUMBER	DOC TYPE	DOC PART	REVISION
SD-35313-001	PSD	001	C1

MATERIAL NUMBER	CUSTOMER	SHEET NUMBER
SEE TABLE	GENERAL MARKET	1 OF 1

DOCUMENT STATUS	P1	RELEASE DATE	2023/02/24 12:54:50

FORMAT: Eng-lega-master-tb-prod-B
REVISION: E1
DATE: 2021/05/01