CABLE LENGTH TOLERANCES
>.3M [1FT]: +19mm-0 [+.75in-0]
.3 - .9M [1 - 3FT]: +44.5mm-0 [+1.75in-0]
.9 - 1.8M [3 - 6FT]: +55.6mm-0 [+2.19in-0]
1.8 - 3.7M [6 - 12FT: +88.9mm-0 [+3.50in-0]
3.7 - 7.3M [12 - 24FT]: +165.1mm-0 [+6.50in-0]
7.3-14.6M [24 - 48FT]: +317.5mm-0 [+12.50in-0]
14.6 - 30.5M [48-100FT]: +622.3mm-0 [+24.50in-0]
OVER 30M [100FT] +2% OF FINISHED LENGTH

PART NUMBER LEGEND

603000C06F120

FINISHED LENGTH:
F010= 1 FOOT
F100= 10 FEET
M005= 0.5 METER
M010= 1 METER
M100= 10 METER

MATERIAL NO.	ENGINEERING NO.	FINISHED LENGTH
1300000045	32342	3.0 FT [0.9M]
1300000046	32350	6.0 FT. [1.8M]
1300000151	603000C06F120	12.0 FT. [3.7M]
1300000153	603000C06F150	15.0 FT. [4.6M]
1300000157	603000C06F300	30.0 FT. [9.1M]

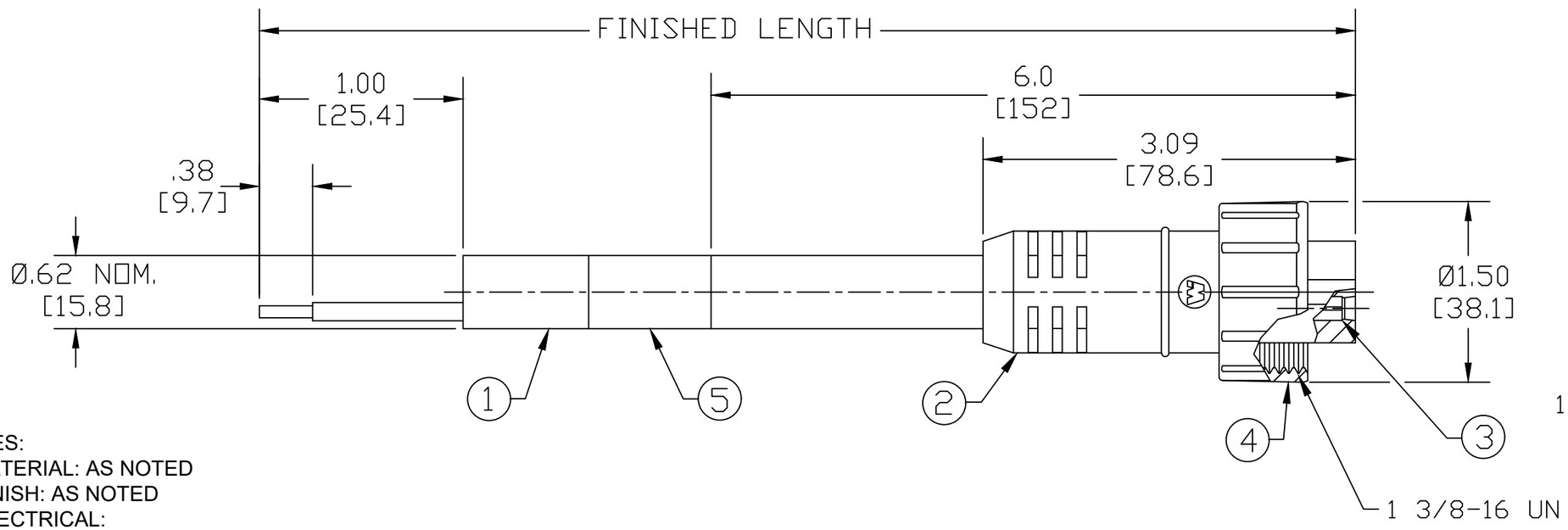

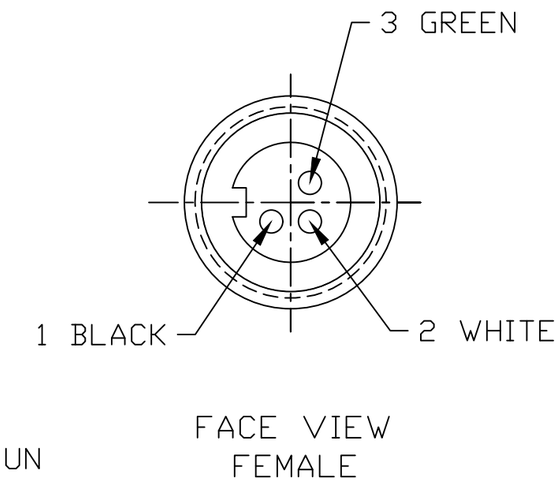

NOTES:
1. MATERIAL: AS NOTED
2. FINISH: AS NOTED
3. ELECTRICAL:
   VOLTAGE: 600V AC/DC
   CURRENT: 25A
4. TEMP RATING: -25°C TO +90°C
5. PROTECTION: IP67 (WHEN MATED)
6. COUPLING THREAD: AS NOTED
7. ALL DIMS ARE FOR REFERENCE UNLESS TOLERENCED OR NOTED OTHERWISE

ITEM	COMPONENT	MATERIAL	FINISH
5	WRAP LABEL	VINYL	BLACK/YELLOW
4	COUPLING NUT	THERMOPLASTIC	BLACK
3	CONTACT SOCKET	COPPER ALLOY	UN-PLATED
2	OVERMOLD	RUBBER	YELLOW
1	CABLE-12 AWG SOOW	CPE JACKET	YELLOW

DOCUMENT STATUS | P1 | RELEASE DATE | 2019/10/09 12:58:24

SYMBOLS: A = 0, C = 0, B = 0, S = 0, ▼ = 0, C = 0, ☒ = 0, ■ = 0, ▽ = 0

THIS DRAWING CONTAINS INFORMATION THAT IS PROPRIETARY TO MOLEX ELECTRONIC TECHNOLOGIES, LLC AND SHOULD NOT BE USED WITHOUT WRITTEN PERMISSION

DIMENSION UNITS: INCH/MM | SCALE: 1:1

GENERAL TOLERANCES (UNLESS SPECIFIED)

	mm	INCH
4 PLACES	±----	±----
3 PLACES	±----	±----
2 PLACES	±----	±0.01
1 PLACE	±0.3	±----
0 PLACES	±----	±----
ANGULAR TOL	± 2.0 °	

DRAFT WHERE APPLICABLE MUST REMAIN WITHIN DIMENSIONS

CURRENT REV DESC: RELEASED
EC NO: 624731
DRWN: RSTONE 2019/09/24
CHK'D: CCHRASTKA 2019/10/01
APPR: BWOODMAN 2019/10/09

INITIAL REVISION:
DRWN: RSTONE 2019/09/24
APPR: BWOODMAN 2019/10/09

THIRD ANGLE PROJECTION | DRAWING: B-SIZE | SERIES: 130000 | MATERIAL NUMBER | CUSTOMER: GENERAL MARKET | SHEET NUMBER: 1 OF 1

molex

QUICK CHANGE CABLE ASSY
3P FEMALE, 12 AWG, SOOW

PRODUCT CUSTOMER DRAWING

DOCUMENT NUMBER	DOC TYPE	DOC PART	REVISION
1300000045	PSD	000	A

FORMAT: IN-ACAD-tb-prod-B
REVISION: A1
DATE: 2019/06/12