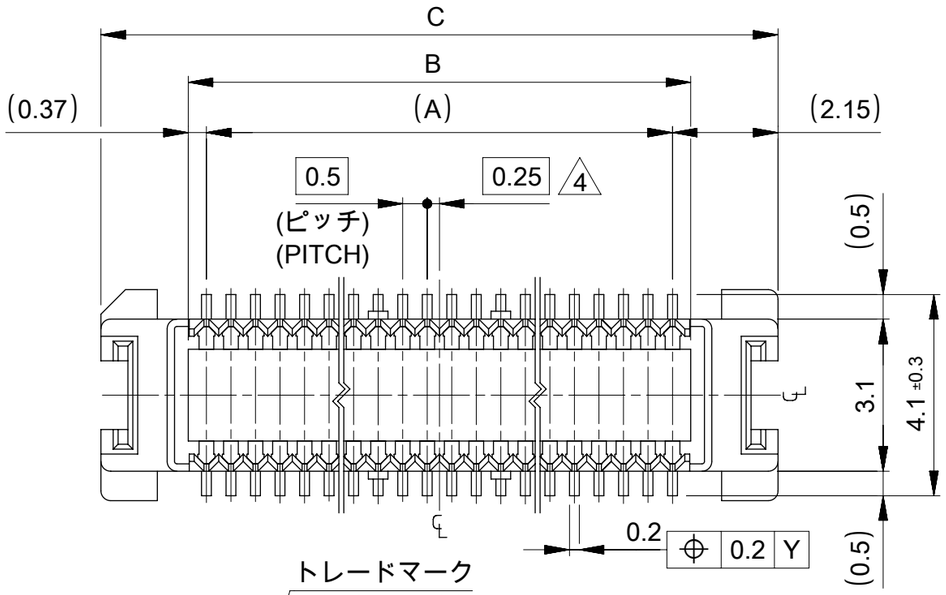

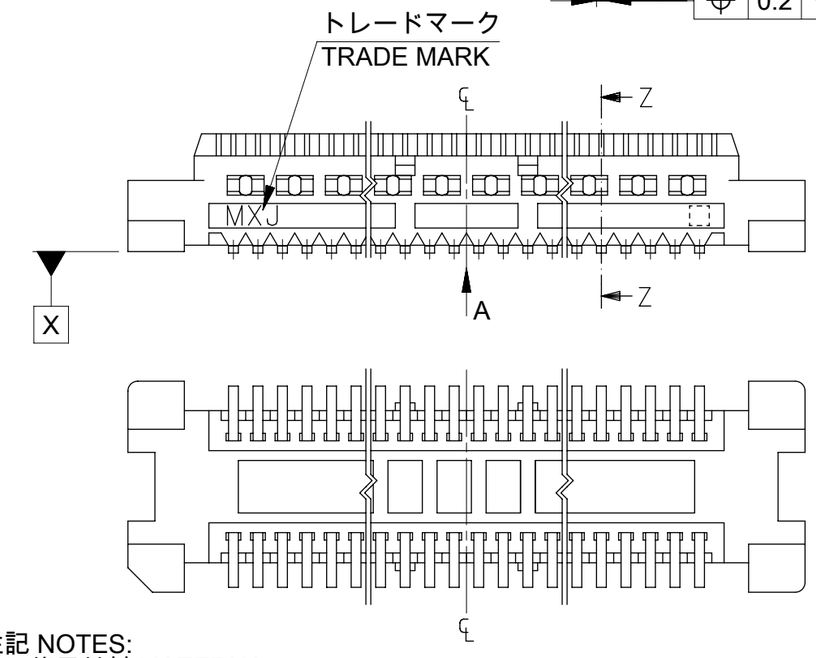

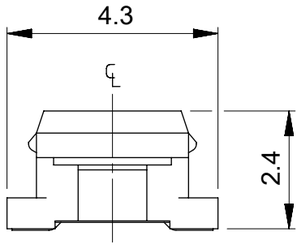

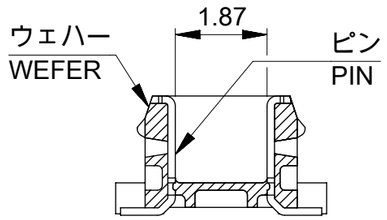

SECT.Z-Z

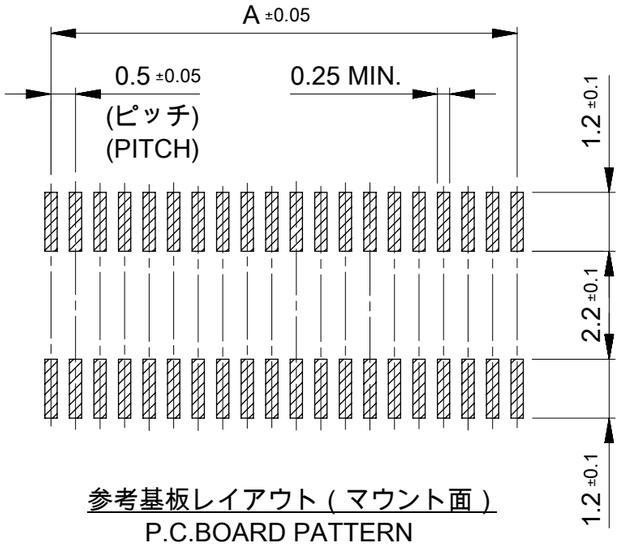

参考基板レイアウト (マウント面)
P.C.BOARD PATTERN
DIMENSION. (REF.)
(MOUNTING AREA)

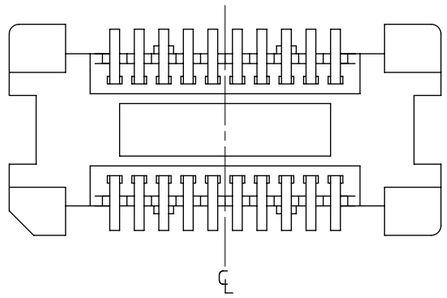

VIEW A (CASE OF 20-30CKT)

注記 NOTES:

1. 使用材料 MATERIAL
   ハウジング : L C Pガラス入り (白) ,UL94V-0
   HOUSING :LCP(G.F.)(COLOR:WHITE),UL94V0
   ターミナル : 黄銅 (t=0. 15)
   TERMINAL:BRASS(t=0.15)
2. メッキ仕様PLATING
   全体仕上げ : 金メッキ 0.1 MICROMETER MIN.
   ALL OVER :GOLD 0.1 MICROMETER MIN.
   下地メッキ : ニッケルメッキ 1.5 MICROMETER MIN.
   UNDER PLATNG : NICKEL 1.5 MICROMETER MIN.
3. 基準面 X からのソルダーテールの半田付け面のズレ量は、上方向 0
   下方向0.15MAX . とする。
   MISALIGNMENT OF SOLDER TAIL FROM X
   : UPPER DRECTION 0, LOWER DIRECTION 0.15 MAX.
4. (全極数/2) = 偶数の場合に適用。
   APPLY FOR (CIRCUIT/2)=EVEN.
5. 嵌合相手 : 52991シリーズ (嵌合高さ = 3mm)、54167シリーズ (嵌合高さ = 3mm)
   MATE WITH: 52991 SERIES (HEIGHT = 3mm), AND 54167 SERIES (HEIGHT = 3mm)
6. テール平坦度は、0.1MAX.
   TAIL COPLANARITY TO BE 0.1MAX.
7. ELV及びRoHS適合品
   ELV AND RoHS COMPLIANT

23.8	20.24	19.5	53748-0808	80
21.3	17.74	17	53748-0708	70
18.8	15.24	14.5	53748-0608	60
16.3	12.74	12	53748-0508	50
13.8	10.24	9.5	53748-0408	40
11.3	7.74	7	53748-0308	30
8.8	5.24	4.5	53748-0208	20
C	B	A	EMBOSSED TAPE / ORDER NO.	極数 / CIRCUIT
CONNECTOR SERIES NO.			53748-***0	

THIS DRAWING CONTAINS INFORMATION THAT IS PROPRIETARY TO MOLEX ELECTRONIC TECHNOLOGIES, LLC AND SHOULD NOT BE USED WITHOUT WRITTEN PERMISSION

GENERAL TOLERANCES (UNLESS SPECIFIED)	
10 UNDER	±0.2
10 OVER 30 UNDER	±0.25
30 OVER	±0.3
ANGULAR±3°	
DRAFT WHERE APPLICABLE MUST REMAIN WITHIN DIMENSIONS	

DIMENSION UNITS	SCALE
mm	8:1
GENERAL TOLERANCES (UNLESS SPECIFIED)	
ANGULAR TOL	± 3.0 °
4 PLACES	± 0.2
3 PLACES	± 0.25
2 PLACES	± 0.3
1 PLACE	±
0 PLACES	±
DRAFT WHERE APPLICABLE MUST REMAIN WITHIN DIMENSIONS	

CURRENT REV DESC:

EC NO:	739518	
DRWN:	TNAKAGAWA01	2023/02/21
CHK'D:	SMARUYAMA	2023/06/02
APPR:	YNAITO	2023/06/02

INITIAL REVISION:

DRWN:	NAKAMURAA	2008/12/08
APPR:	NUKITA	2009/01/09

molex

0.5 MM PITCH B-TO-B CONN.
HEIGHT = 3 PLUG

PRODUCT CUSTOMER DRAWING

DOCUMENT NUMBER	DOC TYPE	DOC PART	REVISION
SD-53748-002	PSD	001	F

THIRD ANGLE PROJECTION	DRAWING	SERIES	MATERIAL NUMBER	CUSTOMER	SHEET NUMBER
	A3-SIZE	53748	SEE TABLE	GENERAL	1 OF 2

DOCUMENT STATUS	P1	RELEASE DATE	2023/06/02 09:12:01

FORMAT: master-tb-prod-A3
REVISION: J1
DATE: 2021/05/01

嵌合相手 MATE WITH
52991-***8 (白 WHITE)
52991-***2 (白 WHITE)
54167-***8 (黒 BLACK)

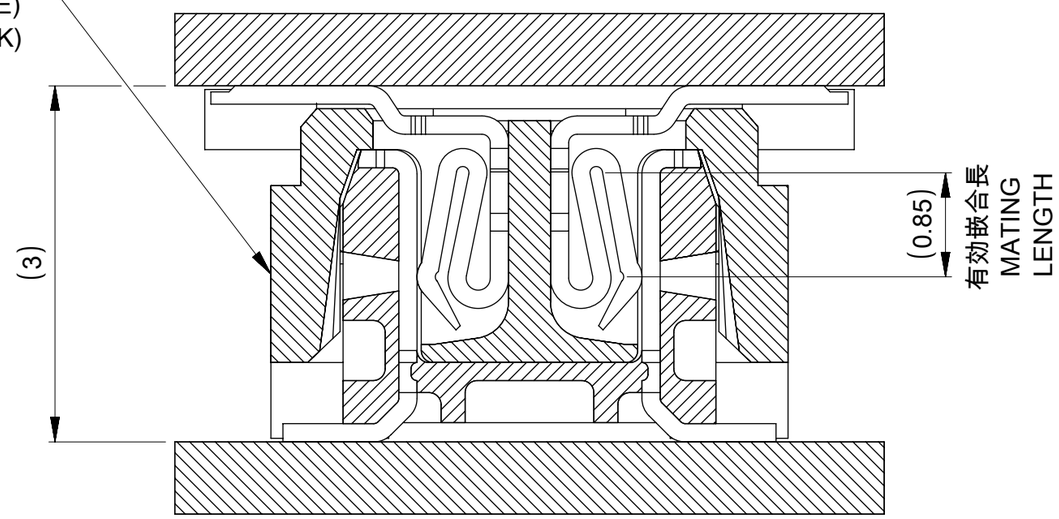

嵌合断面図（参考）
MATED DRAWING (REF.)

GENERAL TOLERANCES (UNLESS SPECIFIED)	
10^{UNDER}	±0.2
$10^{OVER}30^{UNDER}$	±0.25
30^{OVER}	±0.3
ANGULAR±3°	
DRAFT WHERE APPLICABLE MUST REMAIN WITHIN DIMENSIONS	

THIS DRAWING CONTAINS INFORMATION THAT IS PROPRIETARY TO MOLEX ELECTRONIC TECHNOLOGIES, LLC AND SHOULD NOT BE USED WITHOUT WRITTEN PERMISSION

DIMENSION UNITS	SCALE
mm	20:1

GENERAL TOLERANCES (UNLESS SPECIFIED)		
ANGULAR TOL	±	3.0 °
4 PLACES	±	0.2
3 PLACES	±	0.25
2 PLACES	±	0.3
1 PLACE	±	
0 PLACES	±	
DRAFT WHERE APPLICABLE MUST REMAIN WITHIN DIMENSIONS		

CURRENT REV DESC:

EC NO: 739518
DRWN: TNAKAGAWA01 2023/02/21
CHK'D: SMARUYAMA 2023/06/02
APPR: YNAITO 2023/06/02

INITIAL REVISION:
DRWN: NAKAMURAA 2008/12/08
APPR: NUKITA 2009/01/09

THIRD ANGLE PROJECTION | DRAWING: A3-SIZE | SERIES: 53748

molex

0.5 MM PITCH B-TO-B CONN.
HEIGHT = 3 PLUG

PRODUCT CUSTOMER DRAWING

DOCUMENT NUMBER	DOC TYPE	DOC PART	REVISION
SD-53748-002	PSD	001	F

MATERIAL NUMBER	CUSTOMER	SHEET NUMBER
SEE SHEET 1	GENERAL	2 OF 2

DOCUMENT STATUS	P1	RELEASE DATE	2023/06/02 09:12:01

FORMAT: master-tb-prod-A3
REVISION: J1
DATE: 2021/05/01

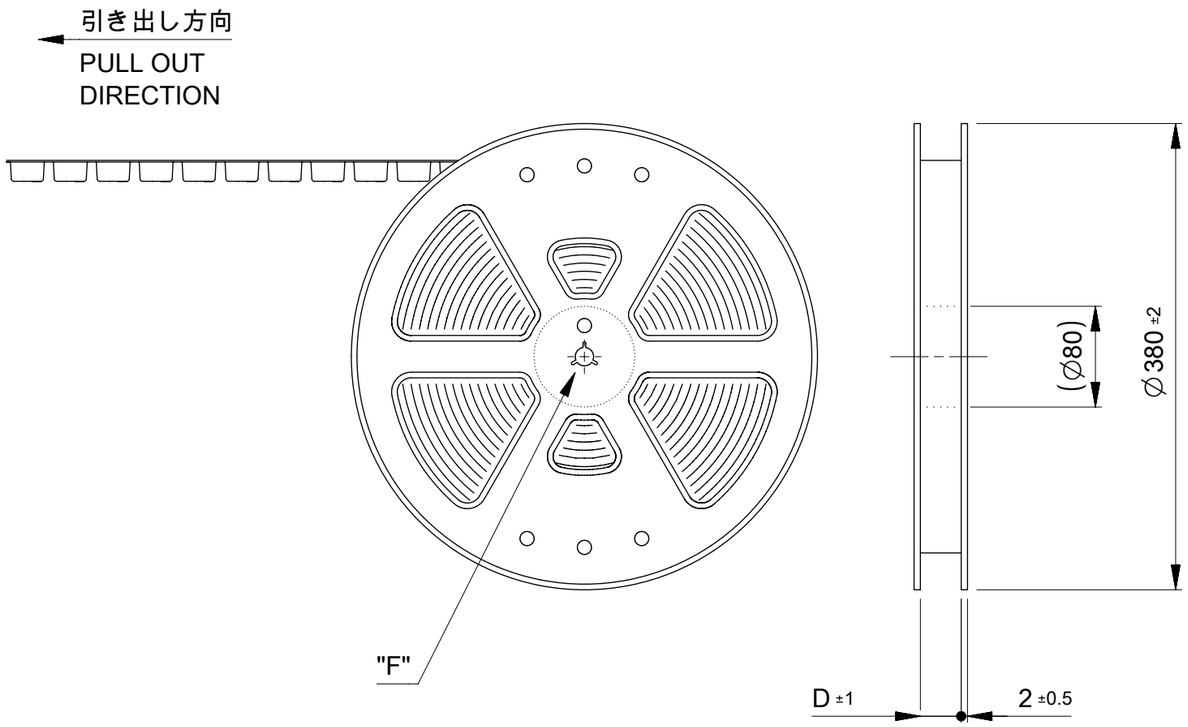

NOTES

1. 製品詳細寸法については図面 SD-53748-002を参照下さい。
   DETAIL DIMENSION, SEE SD-53748-002
2. 梱包数量 : 3000個 / リール
   NUMBER OF CONNECTORS : 3000PCS/REEL
3. リードテープ長さ LEAD TAPE LENGTH

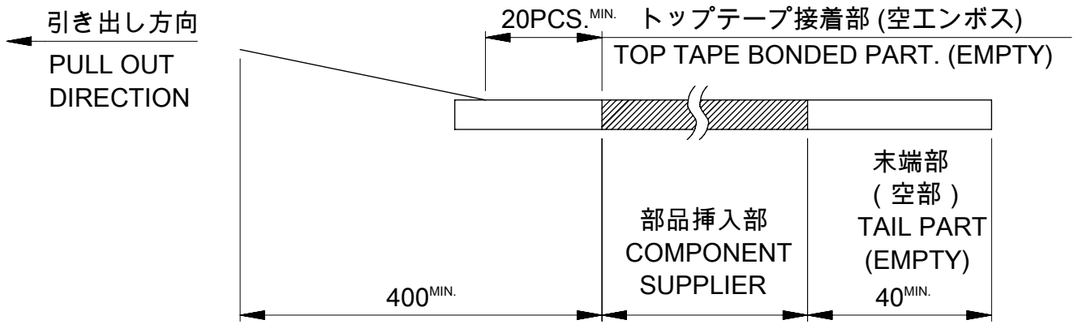

4. トップテープの剥離強度 : 0.1N ~ 0.7N(10.2gf ~ 71.4gf)
   (剥離方向は下図参照)
   尚、本規格値は出荷時に適用。(但し、輸送時に剥離が発生しないこと。)
   PEELING OFF FORCE OF TOP TAPE: 0.1N ~ 0.7N(10.2gf ~ 71.4gf)
   (PEELING DIRECTION AS SHOWN IN FOLLOWING FIG,)
   THIS REQUIREMENT SHOULD BE APPLIED AT SHIPMENT.
   PEEL OFF SHOULD NOT BE ALLOWED, DURING TRANSPORTATION.

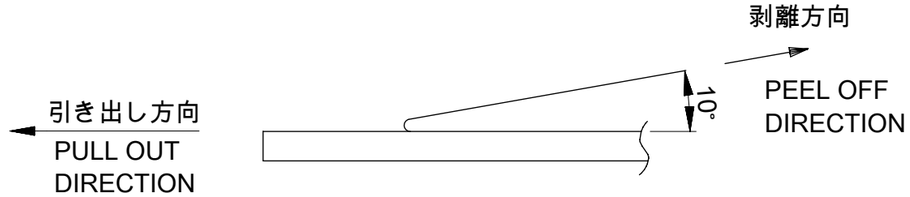

5. 材料 (MATERIAL)
   キャリアテープ (CARRIER TAPE) : ポリプロピレン (POLYPROPYLENE)
   トップテープ (TOPTAPE) : PET , PE , PEF
   リール(REEL) : ポリスチレン (PS) <リサイクル材を含む >
   POLYSTYREN(PS) <RECYCLE MATERIAL CONTANED>

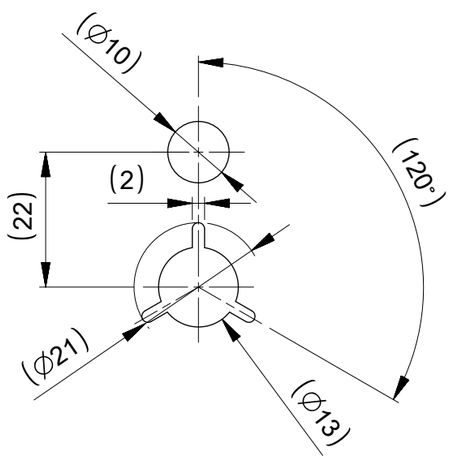

DETAIL "F"

GENERAL TOLERANCES (UNLESS SPECIFIED)	
10UNDER	±0.2
10OVER30UNDER	±0.25
30OVER	±0.3
ANGULAR±3°	
DRAFT WHERE APPLICABLE MUST REMAIN WITHIN DIMENSIONS	

THIS DRAWING CONTAINS INFORMATION THAT IS PROPRIETARY TO MOLEX ELECTRONIC TECHNOLOGIES, LLC AND SHOULD NOT BE USED WITHOUT WRITTEN PERMISSION

DIMENSION UNITS	SCALE
mm	NTS

GENERAL TOLERANCES (UNLESS SPECIFIED)		
ANGULAR TOL	±	3.0 °
4 PLACES	±	0.2
3 PLACES	±	0.25
2 PLACES	±	0.3
1 PLACE	±	
0 PLACES	±	
DRAFT WHERE APPLICABLE MUST REMAIN WITHIN DIMENSIONS		

CURRENT REV DESC:

EC NO: 739518
DRWN: TNAKAGAWA01 2023/02/21
CHK'D: SMARUYAMA 2023/06/02
APPR: YNAITO 2023/06/02

INITIAL REVISION:
DRWN: NAKAMURAA 2008/12/08
APPR: NUKITA 2009/01/09

molex

0.5 MM PITCH B-TO-B CONN.
HEIGHT = 3 PLUG EMBOSS TAPE PACKAGE

PRODUCT CUSTOMER DRAWING

DOCUMENT NUMBER	DOC TYPE	DOC PART	REVISION
SD-53748-005	PSD	001	F

THIRD ANGLE PROJECTION	DRAWING	SERIES	MATERIAL NUMBER	CUSTOMER	SHEET NUMBER
	A3-SIZE	53748	SEE SHEET 2-5	GENERAL	1 OF 5

DOCUMENT STATUS	P1	RELEASE DATE	2023/06/02 09:12:01

FORMAT: master-tb-prod-A3
REVISION: J1
DATE: 2021/05/01

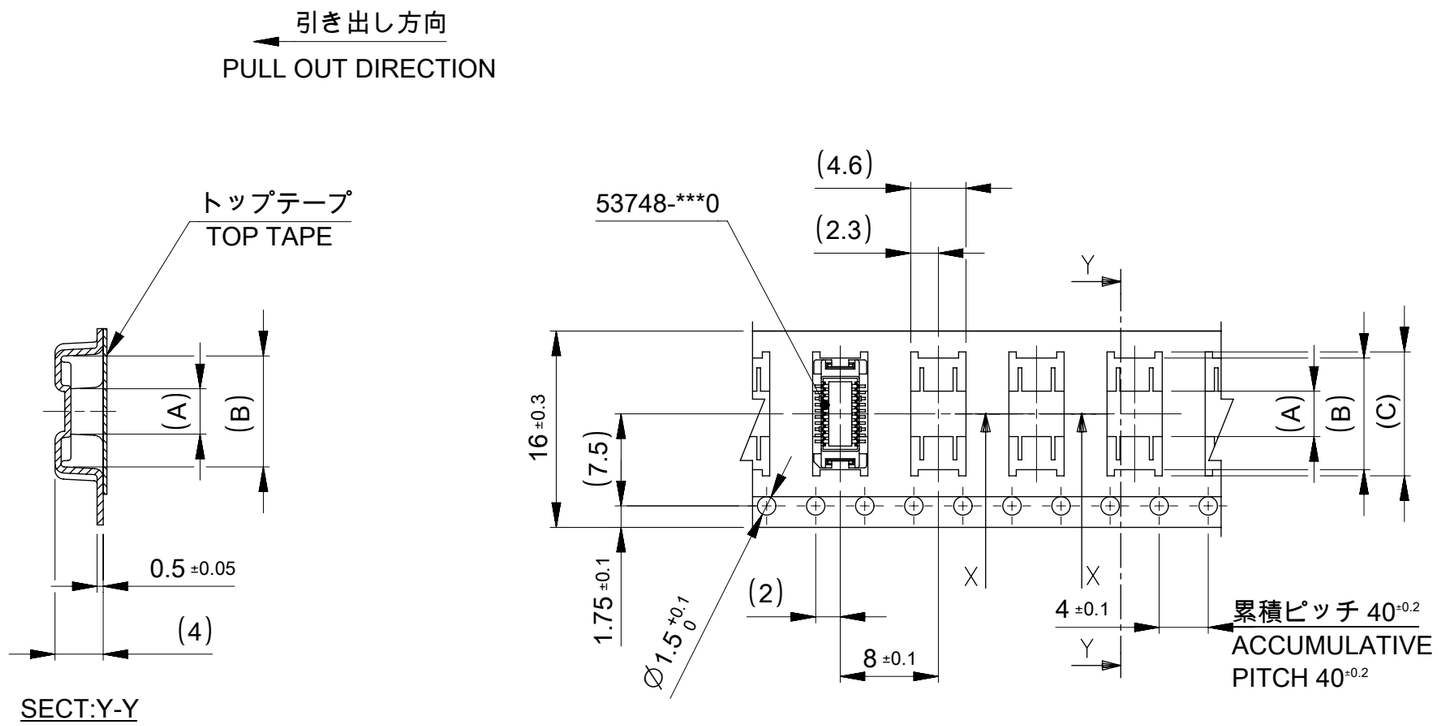

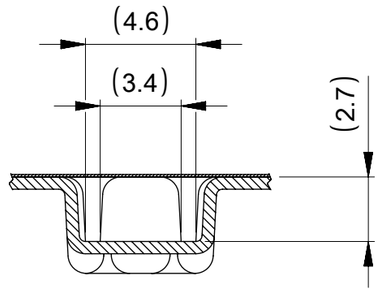

SECT:X-X
(SCALE:4-1)

16mm 幅キャリアテープ
16mm WIDTH CARRIER TAPE

16	17.5	10.1	9.1	3.7	53748-0208	20
キャリアテープ幅 CARRIER TAPE WIDTH	D	(C)	(B)	(A)	MATERIAL NO.	極数 CKT.

THIS DRAWING CONTAINS INFORMATION THAT IS PROPRIETARY TO MOLEX ELECTRONIC TECHNOLOGIES, LLC AND SHOULD NOT BE USED WITHOUT WRITTEN PERMISSION

GENERAL TOLERANCES (UNLESS SPECIFIED)	
10 UNDER	±0.2
10 OVER 30 UNDER	±0.25
30 OVER	±0.3
ANGULAR±3°	
DRAFT WHERE APPLICABLE MUST REMAIN WITHIN DIMENSIONS	

DIMENSION UNITS	SCALE
mm	NTS

GENERAL TOLERANCES (UNLESS SPECIFIED)		
ANGULAR TOL	±	3.0 °
4 PLACES	±	0.2
3 PLACES	±	0.25
2 PLACES	±	0.3
1 PLACE	±	
0 PLACES	±	
DRAFT WHERE APPLICABLE MUST REMAIN WITHIN DIMENSIONS		

CURRENT REV DESC:

EC NO: 739518
DRWN: TNAKAGAWA01 2023/02/21
CHK'D: SMARUYAMA 2023/06/02
APPR: YNAITO 2023/06/02

INITIAL REVISION:
DRWN: NAKAMURAA 2008/12/08
APPR: NUKITA 2009/01/09

molex

0.5 MM PITCH B-TO-B CONN.
HEIGHT = 3 PLUG EMBOSS TAPE PACKAGE

PRODUCT CUSTOMER DRAWING

DOCUMENT NUMBER	DOC TYPE	DOC PART	REVISION
SD-53748-005	PSD	001	F

THIRD ANGLE PROJECTION	DRAWING	SERIES	MATERIAL NUMBER	CUSTOMER	SHEET NUMBER
	A3-SIZE	53748	SEE TABLE	GENERAL	2 OF 5

DOCUMENT STATUS	P1	RELEASE DATE	2023/06/02 09:12:01

FORMAT: master-tb-prod-A3
REVISION: J1
DATE: 2021/05/01

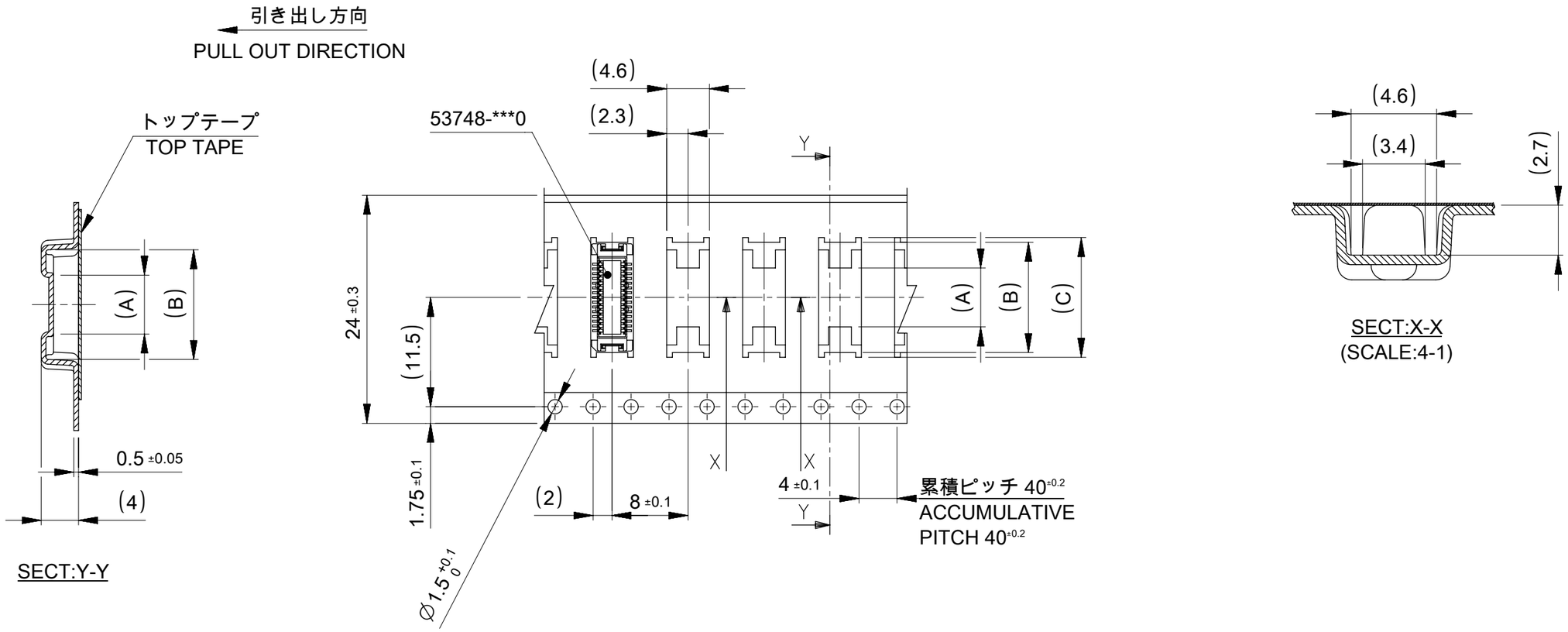

24mm 幅キャリアテープ
24mm WIDTH CARRIER TAPE

キャリアテープ幅 CARRIER TAPE WIDTH	D	(C)	(B)	(A)	MATERIAL NO.	極数 CKT.
24	25.5	15.1	14.1	7.4	53748-0408	40
		12.6	11.6	4.9	53748-0308	30

THIS DRAWING CONTAINS INFORMATION THAT IS PROPRIETARY TO MOLEX ELECTRONIC TECHNOLOGIES, LLC AND SHOULD NOT BE USED WITHOUT WRITTEN PERMISSION

GENERAL TOLERANCES (UNLESS SPECIFIED)	
10 UNDER	±0.2
10 OVER 30 UNDER	±0.25
30 OVER	±0.3
ANGULAR±3°	
DRAFT WHERE APPLICABLE MUST REMAIN WITHIN DIMENSIONS	

DIMENSION UNITS	SCALE
mm	NTS

GENERAL TOLERANCES (UNLESS SPECIFIED)		
ANGULAR TOL	±	3.0 °
4 PLACES	±	0.2
3 PLACES	±	0.25
2 PLACES	±	0.3
1 PLACE	±	
0 PLACES	±	
DRAFT WHERE APPLICABLE MUST REMAIN WITHIN DIMENSIONS		

CURRENT REV DESC:

EC NO: 739518
DRWN: TNAKAGAWA01 2023/02/21
CHK'D: SMARUYAMA 2023/06/02
APPR: YNAITO 2023/06/02

INITIAL REVISION:
DRWN: NAKAMURAA 2008/12/08
APPR: NUKITA 2009/01/09

THIRD ANGLE PROJECTION | DRAWING: A3-SIZE | SERIES: 53748

molex

0.5 MM PITCH B-TO-B CONN.
HEIGHT = 3 PLUG EMBOSS TAPE PACKAGE

PRODUCT CUSTOMER DRAWING

DOCUMENT NUMBER	DOC TYPE	DOC PART	REVISION
SD-53748-005	PSD	001	F

MATERIAL NUMBER	CUSTOMER	SHEET NUMBER
SEE TABLE	GENERAL	3 OF 5

DOCUMENT STATUS	P1	RELEASE DATE	2023/06/02 09:12:01

FORMAT: master-tb-prod-A3
REVISION: J1
DATE: 2021/05/01

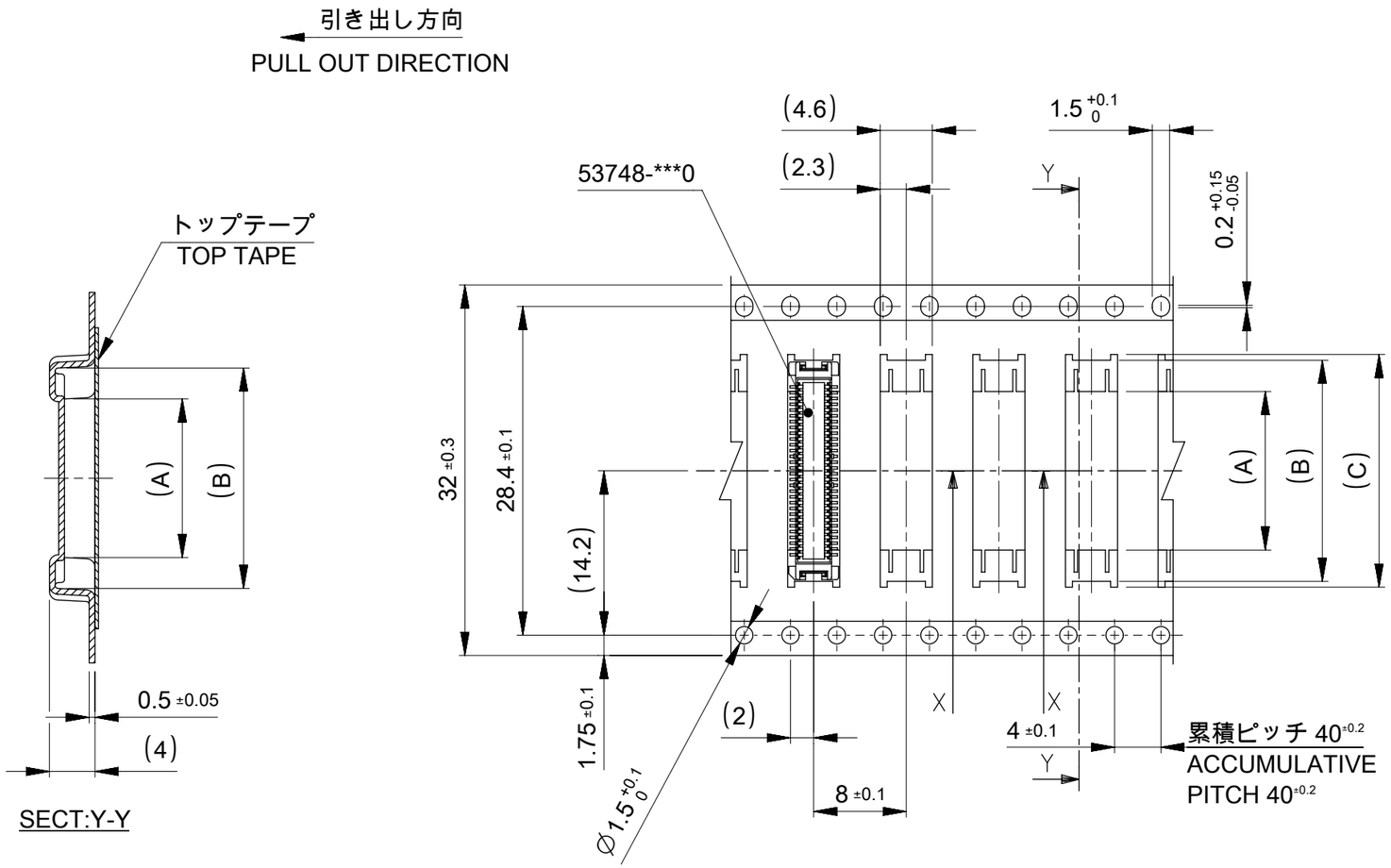

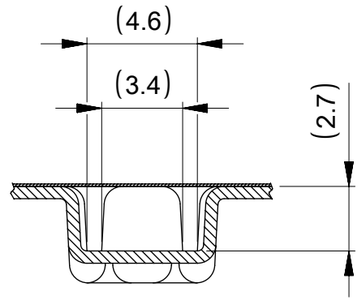

SECT:X-X
(SCALE:4-1)

32mm 幅キャリアテープ
32mm WIDTH CARRIER TAPE

キャリアテープ幅 CARRIER TAPE WIDTH	D	(C)	(B)	(A)	MATERIAL NO.	極数 CKT.
32	33.5	20.1	19.1	13.7	53748-0608	60
		17.6	16.6	11.2	53748-0508	50

THIS DRAWING CONTAINS INFORMATION THAT IS PROPRIETARY TO MOLEX ELECTRONIC TECHNOLOGIES, LLC AND SHOULD NOT BE USED WITHOUT WRITTEN PERMISSION

DIMENSION UNITS	SCALE
mm	NTS

GENERAL TOLERANCES (UNLESS SPECIFIED)

ANGULAR TOL	±	30 °
4 PLACES	±	0.2
3 PLACES	±	0.25
2 PLACES	±	0.3
1 PLACE	±	
0 PLACES	±	

DRAFT WHERE APPLICABLE MUST REMAIN WITHIN DIMENSIONS

GENERAL TOLERANCES (UNLESS SPECIFIED)

10 UNDER	±0.2
10 OVER 30 UNDER	±0.25
30 OVER	±0.3
ANGULAR±3°	

DRAFT WHERE APPLICABLE MUST REMAIN WITHIN DIMENSIONS

CURRENT REV DESC:

EC NO: 739518
DRWN: TNAKAGAWA01 2023/02/21
CHK'D: SMARUYAMA 2023/06/02
APPR: YNAITO 2023/06/02

INITIAL REVISION:
DRWN: NAKAMURAA 2008/12/08
APPR: NUKITA 2009/01/09

THIRD ANGLE PROJECTION | DRAWING: A3-SIZE | SERIES: 53748

molex

0.5 MM PITCH B-TO-B CONN.
HEIGHT = 3 PLUG EMBOSS TAPE PACKAGE

PRODUCT CUSTOMER DRAWING

DOCUMENT NUMBER	DOC TYPE	DOC PART	REVISION
SD-53748-005	PSD	001	F

MATERIAL NUMBER	CUSTOMER	SHEET NUMBER
SEE TABLE	GENERAL	4 OF 5

DOCUMENT STATUS	P1	RELEASE DATE	2023/06/02 09:12:01

FORMAT: master-tb-prod-A3
REVISION: J1
DATE: 2021/05/01

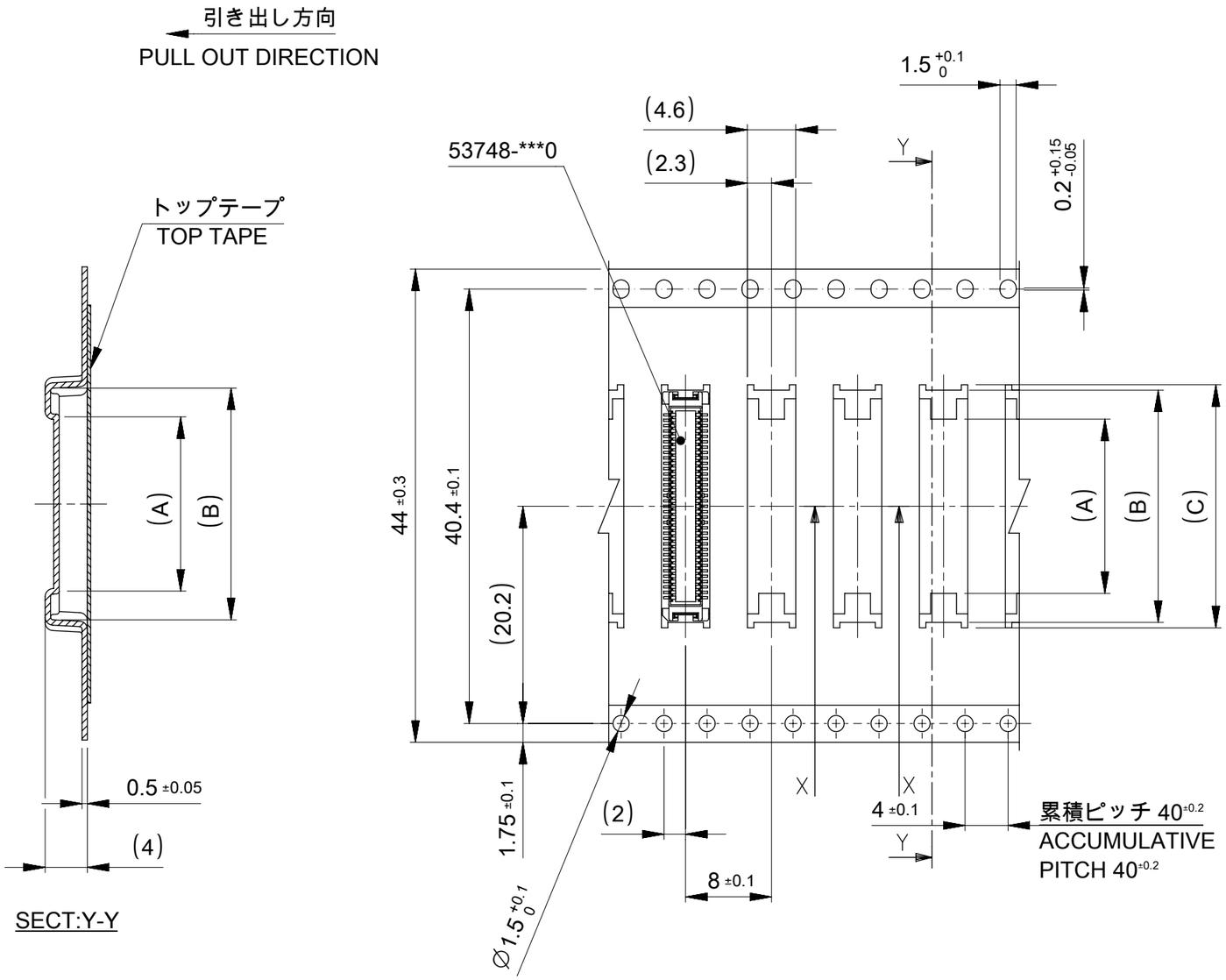

SECT:Y-Y

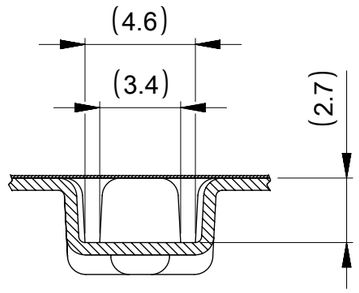

SECT:X-X
(SCALE:4-1)

44mm 幅キャリアテープ
44mm WIDTH CARRIER TAPE

キャリアテープ幅 CARRIER TAPE WIDTH	D	(C)	(B)	(A)	MATERIAL NO.	極数 CKT.
44	45.5	25.1	24.1	18.7	53748-0808	80
		22.6	21.6	16.2	53748-0708	70

GENERAL TOLERANCES (UNLESS SPECIFIED)	
10^{UNDER}	±0.2
$10^{OVER}30^{UNDER}$	±0.25
30^{OVER}	±0.3
ANGULAR±3°	
DRAFT WHERE APPLICABLE MUST REMAIN WITHIN DIMENSIONS	

THIS DRAWING CONTAINS INFORMATION THAT IS PROPRIETARY TO MOLEX ELECTRONIC TECHNOLOGIES, LLC AND SHOULD NOT BE USED WITHOUT WRITTEN PERMISSION

DIMENSION UNITS	SCALE
mm	NTS

GENERAL TOLERANCES (UNLESS SPECIFIED)		
ANGULAR TOL	±	3.0 °
4 PLACES	±	0.2
3 PLACES	±	0.25
2 PLACES	±	0.3
1 PLACE	±	
0 PLACES	±	
DRAFT WHERE APPLICABLE MUST REMAIN WITHIN DIMENSIONS		

CURRENT REV DESC:

EC NO: 739518
DRWN: TNAKAGAWA01 2023/02/21
CHK'D: SMARUYAMA 2023/06/02
APPR: YNAITO 2023/06/02

INITIAL REVISION:
DRWN: NAKAMURAA 2008/12/08
APPR: NUKITA 2009/01/09

THIRD ANGLE PROJECTION | DRAWING: A3-SIZE | SERIES: 53748

molex

0.5 MM PITCH B-TO-B CONN.
HEIGHT = 3 PLUG EMBOSS TAPE PACKAGE

PRODUCT CUSTOMER DRAWING

DOCUMENT NUMBER	DOC TYPE	DOC PART	REVISION
SD-53748-005	PSD	001	F

MATERIAL NUMBER	CUSTOMER	SHEET NUMBER
SEE TABLE	GENERAL	5 OF 5

DOCUMENT STATUS	P1	RELEASE DATE	2023/06/02 09:12:01

FORMAT: master-tb-prod-A3
REVISION: J1
DATE: 2021/05/01