THIS DRAWING IS UNPUBLISHED. RELEASED FOR PUBLICATION 20
© COPYRIGHT 20 BY TYCO ELECTRONICS CORPORATION, ALL RIGHTS RESERVED.

SET UP GAUGE	LOC	DIST
2119599-1	A	66

REVISIONS

P	LTR	DESCRIPTION	DATE	DWN	APVD
	A	RELEASED	26MAR2015	RK	TE

ATLANTIC VERSION TERMINATOR INTERFACE ADAPTER	PART NUMBER	REVISION	DESCRIPTION	FEED TYPE
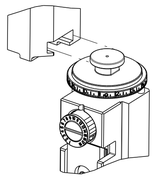	2266655-2	A	FINE CRIMP HEIGHT ADJUST	PNEUMATIC
	2266655-5	A	FINE CRIMP HEIGHT ADJUST	SERVO LATCH PLATE 4
	2266655-6	A	NON-CRIMP HEIGHT ADJUST	4 SERVO LATCH PLATE 12
	2266655-7	A	FINE CRIMP HEIGHT ADJUST	NONE
	7-2266655-7	A	CRIMP TOOLING KIT	-

APPLICATOR STYLE CONVERSION CHART

CONVERT TO	PART NUMBERS REQUIRED					
-	-	-	-	-	-	-
SERVO LATCH PLATE	2119951-1	-	8-2266655-5	1901094-3	-	2168400-6 (QUANTITY 2)
SMART APPLICATOR	2161326-1	-	8-2266655-4	-	-	-
-	-	-	-	-	-	-
PNEUMATIC FEED	2119950-1	1338685-3	5-18022-5	2119641-1	2119799-1	2063440-1
-	-	-	-	-	-	-
-	-	-	-	-	-	-
-	-	-	-	-	-	-
-	-	-	-	-	-	-

APPLICATOR DATA

CRIMP	SIZE	TYPE
WIRE	2.29 mm [.090]	F
INSUL	3.05 mm [.120]	OV

APPLICATOR INSTRUCTIONS 408-10389

TERMINAL DATA: TE TERMINAL — TE CRIMP SPECIFICATION

TERMINAL NAME: .187 FLAG FASTON RECEPTACLE

WIRE STRIP LENGTH	INSULATION DIAMETER RANGE
4.26-5.02 mm [.168-.198 IN]	∅2.29-3.30 mm [.090-.130 IN]

TERMINAL APPLICATION SPECIFICATION			
	571850-5	-	-
	-	-	-

TERMINALS APPLIED 10

TE TERMINAL	TE TERMINAL	TE TERMINAL	TE TERMINAL
626412-1	626412-2	626412-3	

WIRE SIZE	CRIMP HEIGHT mm [INCH]	CRIMP HEIGHT REFERENCE SETTING 9
1.50mm2	1.50+/-0.05 [.059+/-.002]	6.3
16 AWG	1.42+/-0.05 [.056+/-.002]	7.4
1.00mm2	1.32+/-0.05 [.052+/-.002]	8.3
18 AWG	1.24+/-0.05 [.049+/-.002]	9.3
0.75mm2	1.22+/-0.05 [.048+/-.002]	9.5
20 AWG	1.14+/-0.05 [.045+/-.002]	10.1
0.50mm2	1.14+/-0.05 [.045+/-.002]	10.1

1 RECOMMENDED SPARE PARTS

2 GREASE BEARING SURFACES LIGHTLY

3. LUBRICATE DAILY PER THE APPLICATOR INSTRUCTION SHEET SUPPLIED WITH THE APPLICATOR.

4 APPLICATOR SPECIFIC DATA TO BE ENTERED INTO BLANK MEMORY CHIP AT ASSEMBLY. SEE BELOW FOR PART NUMBER:
PNEUMATIC FEED WITH "SMART APPLICATOR" CONVERSION: 8-2266655-4
SERVO FEED WITH "FINE CRIMP HEIGHT ADJUST": 8-2266655-5
SERVO FEED WITH "NON-CRIMP HEIGHT ADJUST": 8-2266655-6

5. ADJUSTMENT OF THE STRIPPER MAY BE REQUIRED WHEN MOVING THE APPLICATOR BETWEEN BENCH AND LEADMAKER APPLICATIONS.

6 APPLY PART NUMBER 1-23419-5 LOCTITE TO THREADS OF ITEMS 62.
APPLY PART NUMBER 2-23419-6 LOCTITE TO THREADS OF ITEM 242.
FOR -6 ONLY APPLY PART NUMBER 1-23419-5 LOCTITE TO THREADS OF ITEMS 37.

7 GREASE THREADS, GROOVE AND O-RING ON ITEMS 35 & 252.

8 MAGNET, ITEM 166 MUST BE ORIENTED CORRECTLY IN ORDER TO PROPERLY ACTUATE THE COUNTER.

9 CRIMP HEIGHT REFERENCE SETTING WAS THE SETTING USED WHEN THE APPLICATOR WAS QUALIFIED AT THE FACTORY. ADJUSTMENT MAY BE NECESSARY WHEN RUNNING APPLICATOR IN THE FIELD.

10 TERMINAL PITCH NOT COMPATIBLE WITH MECHANICAL FEED.

11 TO CONVERT THE APPLICATOR TO A NON-CARRIER CUTTING STYLE, REMOVE ITEM 13 AND ATTACH TO THE LOCATION ON THE BACK SIDE OF THE HOUSING. REFER TO INSTRUCTION SHEET FOR ADDITIONAL INFORMATION.

12 WHEN ASSEMBLING A NON CRIMP HEIGHT ADJUST APPLICATOR (-6) USE SHIMS FROM ITEM 260 TO ACHIEVE A NOMINAL SHIM HEIGHT OF 4.30.

13 CUT TO LENGTH AT ASSEMBLY.

14 QUANITY OF ITEM 129 IS IN METERS.

*WARNING
ON INSTALLATION, SET WIRE DISC, ITEM 40 TO LARGEST WIRE SIZE SETTING. USE OF SETTINGS BELOW MINIMUM REQUIRED CRIMP HEIGHT SETTING WILL CAUSE DAMAGE TO CRIMP TOOLING.

-77	-7	-6	-5	-2	PART NO	DESCRIPTION	ITEM NO
-	2	2	2	2	2168083-1	SCR, SKT HD CAP, RoHS, M3 X 8.0	269
-	1	1	1	1	1633782-3	FENCE	267
-	-	1	-	-	2119957-2	APPLICATOR SHIM PACK	260
-	1	-	1	1	8-21084-0	O-RING, .676 ID, .070 DIA. MAT.	252
-	-	-	-	1	2119640-1	PUSH ROD, AIR FEED	250
-	-	-	-	1	2079988-1	BUSHING, LCH5-12, MISUMI	249
-	-	-	-	1	2119641-1	FEED CAM, AIR FEED	248
-	1	-	1	1	2119798-1	DETENT PIN	247

-77	-7	-6	-5	-2	PART NO	DESCRIPTION	ITEM NO
-	1	-	1	1	1-22279-3	SPRING, COMPRESSION	246
-	-	1	-	-	2119758-1	RAM, AMP STYLE, SIDE FEED, NON-ADJ.	245
-	1	1	1	1	2119082-2	CAM, SNAIL, INSULATION ADJUSTMENT	244
-	1	1	1	1	2079764-1	WASHER, WAVE SPRING, CREST-TO-CREST	243
6 -	1	1	1	1	2119083-1	RETAINER, INSULATION DIAL	242
-	-	2	2	-	2168400-6	SHCS, LOW HEAD, RoHS, M5 X 16	240
-	-	-	-	1	2063440-1	AIR FEED MODULE	238
-	-	1	1	-	2119740-2	TAG,IDENTIFICATION	213
-	-	1	1	-	1901094-3	SPACER, FEEDER	198
-	-	-	-	2	21045-3	RING, RETAIN, EXTERN, 3/16 CRESCENT	172
-	1	1	1	1	994969-1	MAGNET, RARE EARTH HIGH ENERGY	166
-	REF	REF	REF	REF	994970-2	COUNTER, MAGNETIC	164
-	-	-	-	1	240638-1	SPRING, FEED FINGER	163
-	1	1	1	1	2168083-8	SCR, SKT HD CAP, RoHS, M4 X 16	143
-	-	-	-	1	3-23627-7	PIN, RETAIN, GRVD, 3/16 X .854	137
-	-	-	-	1	2119799-1	HOLDER,FEED FINGER, AF	136
-	-	REF	REF	-	SEE NOTE 4	MEMORY CHIP, PROGRAMMED	135
-	-	1	1	-	1633743-1	SERVO FEED LATCH ASM	133
-	1	1	1	1	2217068-1	BRACKET, AIR BLAST	130
14 -	-	-	-	0.5m	2030758-3	TUBING, POLYURETHANE	129
-	1	1	1	1	5018030-2	NUT, HEX, REG, RoHS, M4	128
-	1	1	1	1	2168083-3	SCR, SKT HD CAP, RoHS, M4 X 12.0	127
-	1	1	1	1	986220-3	CLAMP, CABLE, BLACK	126
-	1	1	1	1	1-22281-8	SPRING, COMPRESSION	121
-	1	1	1	1	455888-1	SPACER, CRIMPER	120
-	-	REF	REF	-	2119944-1	FEED FINGER ASSEMBLY,SF	117
-	1	1	1	1	23238-1	INSERT, COUPLING	101
-	1	1	1	1	3-690712-4	FRONT STRIP GUIDE	96
-	2	2	2	2	1-2168083-3	SCR, SKT HD CAP, RoHS, M3 X 16	95
-	1	1	1	1	2168083-6	SCR, SKT HD CAP, RoHS, M5 X 65	93
-	1	1	1	1	2-455888-8	SPACER, CRIMPER	82
-	1	1	1	1	2119956-1	DOCUMENTATION PACKAGE	71
-	1	-	-	1	2119740-1	TAG,IDENTIFICATION	67
-	2	2	2	2	2168078-1	SCREW, DRIVE, RH, RoHS, 2 x .188	66
-	1	-	1	1	2119793-1	LIMITER, ADJUSTMENT BOLT	63
6 -	3	-	3	3	992763-5	SCR, SET, SOC, CONE POINT, M3 x 4.0	62
-	2	2	2	2	2-18032-5	SCR, SET, FLT POINT M5 X 20.0	61
-	1	1	1	1	2079383-4	SCR, BHSC, RoHS (M4 X 8)	60
-	-	-	-	1	5-18022-5	SCR, HEX HD CAP, M4 X 6.0	59
-	-	-	-	1	1338685-3	PAWL, FEED	56
-	-	-	-	1	18023-9	SCR, SKT HD CAP M4 X 6.0	49
-	1	1	1	1	2119656-9	APPLICATOR BASIC ASSEMBLY, SF	46
-	1	-	1	1	2119370-1	RAM, AMP STYLE, SIDE FEED	44
-	1	1	1	1	2079383-7	SCR, BHSC, RoHS (M8 X 25)	41
-	1	-	1	1	2119645-1	DISC, NUMBERED FA WIRE ADJUSTMENT	40
-	1	-	1	1	2119957-1	APPLICATOR SHIM PACK	39
-	1	1	1	1	1-2119644-2	RAM WASHER, PRECISION	38
6 -	1	1	1	1	2119085-1	FA HEAD, ATLANTIC STYLE	37
-	1	-	1	1	2119092-1	BOLT, ADJUSTMENT	35
-	2	2	2	2	2079383-5	SCR, BHSC, RoHS (M4 X 20)	33
-	1	1	1	1	2161328-1	HEX HEAD, FLANGED, M5 x 8mm LONG	32
-	1	1	1	1	1-1320908-3	SPACER, STRIP GUIDE	30
-	1	1	1	1	1-1901086-9	PLATE, STRIP GUIDE	29
-	1	1	1	1	2119791-5	DEPRESSOR, WIRE	28
-	2	2	2	2	22281-6	SPRING, COMPRESSION	27
-	1	1	1	1	356835-1	LEVER, DRAG RELEASE	26
-	1	1	1	1	6-690754-9	DRAG, SPECIAL	25
-	1	1	1	1	5-690440-4	GUIDE, REAR STRIP	24
-	1	1	1	1	980371-4	SCR, SKT HD SHLDR 5.0 DIA X 6.0	23
-	1	1	1	1	2168083-2	SCR, SKT HD CAP, RoHS, M4 X 8.0	21
-	4	4	4	4	1-18028-2	WASHER, FLAT, REG M4	20
-	1	1	1	1	2119533-6	STRIPPER, SIDE FEED	19
1 -	1	1	1	1	3-853720-8	BLADE, SLUG	15
1 -	1	1	1	1	1-853721-8	BLADE, SLUG	10
1 -	1	1	1	1	2-1803012-9	PLATE, REAR SHEAR	9
1 1	1	1	1	1	1803010-4	ANVIL, SPCEIAL, COMBINATION	8
-	-	-	-	-	-	-	7
-	-	-	-	-	-	-	6
-	-	-	-	-	-	-	5
-	1	1	1	1	238009-1	BLOCK, FL CRIMPER SPACER	4
1 1	1	1	1	1	1803208-7	CRIMPER, INSULATION OVERLAP PREMIUM	3
-	1	1	1	1	455888-1	SPACER, CRIMPER	2
1 1	1	1	1	1	8-456406-0	CRIMPER, WIRE PREMIUM	1

ATLANTIC VERSION

Shown on sheets 1 of 4 & 2 of 4
(Pacific version shown on sheets 3 of 4 & 4 of 4)

THIS DRAWING IS A CONTROLLED DOCUMENT FOR TYCO ELECTRONICS CORPORATION. IT IS SUBJECT TO CHANGE WITHOUT NOTICE. QUESTIONS ON THIS DOCUMENT SHOULD BE CONTACTED FOR THE LATEST REVISION.

DIMENSIONS: mm

TOLERANCES UNLESS OTHERWISE SPECIFIED:
0 PLC ±-
1 PLC ±0.5
2 PLC ±0.13
3 PLC ±0.013
4 PLC ±0.0001
ANGLES ±-

MATERIAL -
FINISH -

DWN	K. HUANG	20JAN2015
CHK	L. ZHANG	20JAN2015
APVD	U. GUO	20JAN2015

PRODUCT SPEC -
APPLICATION SPEC -
WEIGHT -

TE Connectivity
Harrisburg, PA 17105-3608

NAME: Ocean Side Feed Applicator -

SIZE	CAGE CODE	DRAWING NO	RESTRICTED TO
A1	00779	C-2266655	-

Customer Accessible Production Drawing — SCALE 1:2 — SHEET 1 OF 4 — REV A

SHEETS 3 & 4 ARE NOT REQUIRED FOR ATLANTIC VERSION

THIS DRAWING IS UNPUBLISHED. RELEASED FOR PUBLICATION 20
© COPYRIGHT 20 BY TYCO ELECTRONICS CORPORATION. ALL RIGHTS RESERVED.

LOC	DIST
A	66

REVISIONS

P	LTR	DESCRIPTION	DATE	DWN	APVD
	-	SEE SHEET 1	-	-	-

FEED TYPE

PNEUMATIC

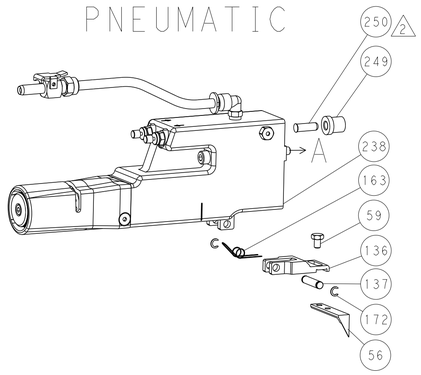

SERVO LATCH PLATE

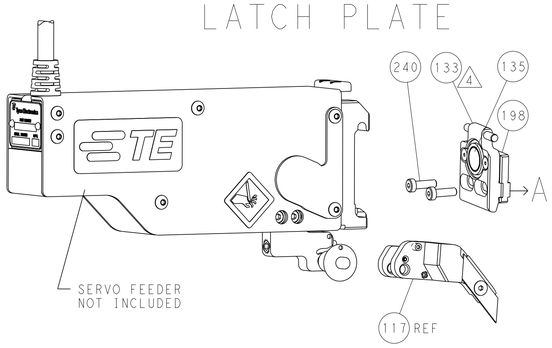

CAM POSITION

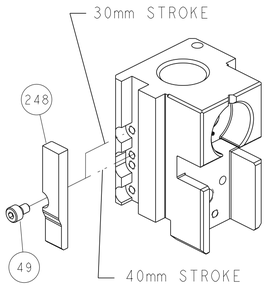

AIR FEED

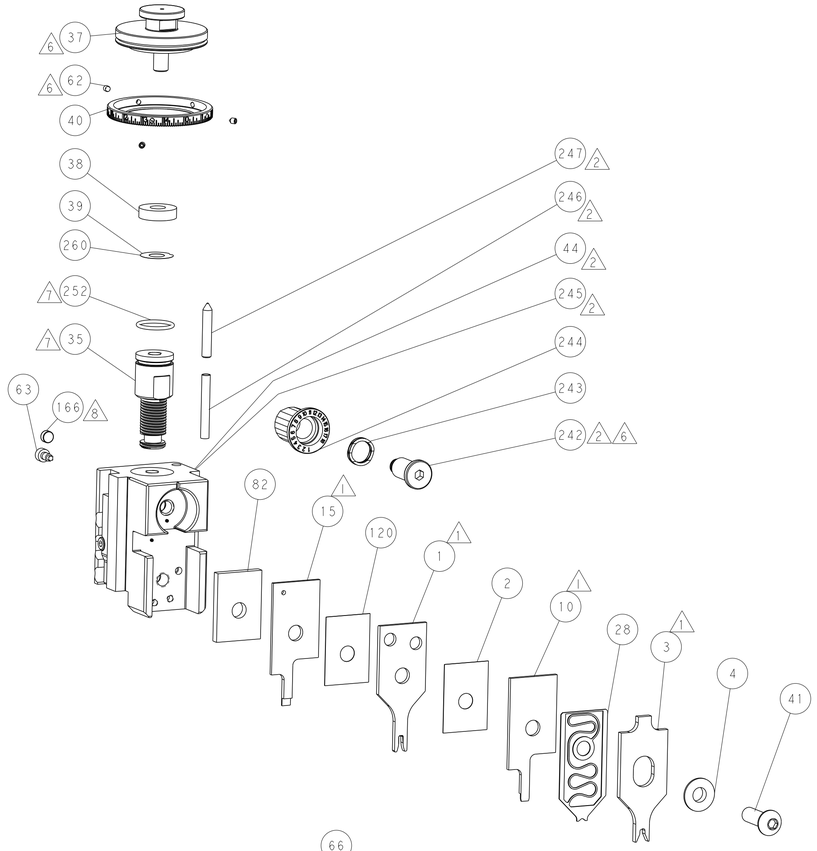

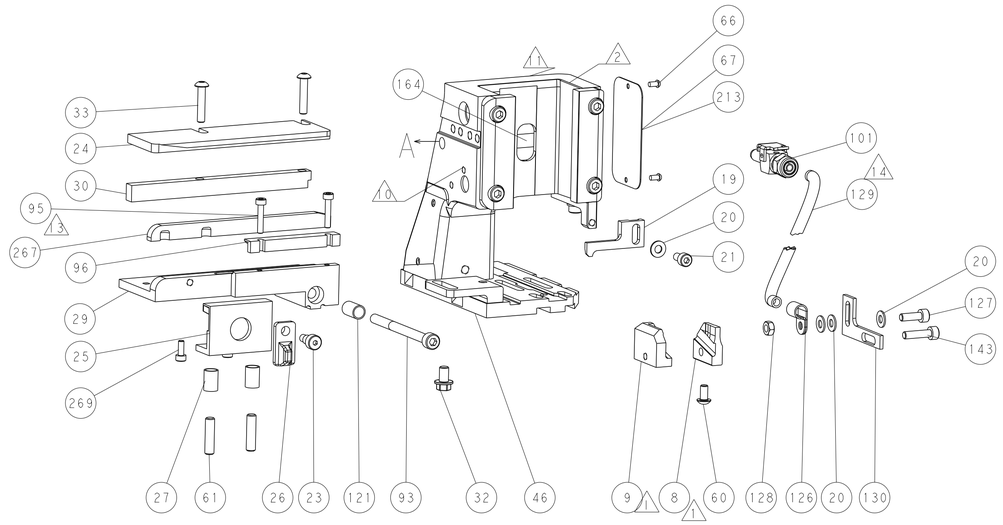

ITEM 30 LOCATED AT
FRONT HOLES

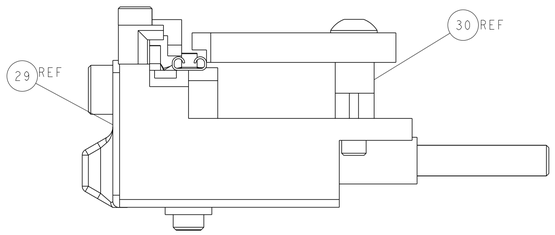

FEED TRACK POSITION
GUIDE BY BODY

ATLANTIC VERSION

Shown on sheets 1 of 4 & 2 of 4
(Pacific version shown on sheets 3 of 4 & 4 of 4)

THIS DRAWING IS A CONTROLLED DOCUMENT FOR TYCO ELECTRONICS CORPORATION IT IS SUBJECT TO CHANGE AND THE CONTROLLING ENGINEERING ORGANIZATION SHOULD BE CONTACTED FOR THE LATEST REVISION.

DWN	K.HUANG	20JAN2015
CHK	L.ZHANG	20JAN2015
APVD	U.GUO	20JAN2015
PRODUCT SPEC	-	
APPLICATION SPEC	-	
WEIGHT	-	

DIMENSIONS: mm

TOLERANCES UNLESS OTHERWISE SPECIFIED:

0 PLC	± -
1 PLC	±0.5
2 PLC	±0.13
3 PLC	±0.013
4 PLC	±0.0001
ANGLES	± -

MATERIAL - -

FINISH - -

TE Connectivity
Harrisburg, PA 17105-3608

NAME: Ocean Side Feed Applicator -

SIZE	CAGE CODE	DRAWING NO	RESTRICTED TO
A1	00779	C-2266655	-

Customer Accessible Production Drawing | SCALE 1:2 | SHEET 2 OF 4 | REV A

AMP 4805 REV 31MAR2000

SHEETS 3 & 4 ARE NOT REQUIRED FOR ATLANTIC VERSION

THIS DRAWING IS UNPUBLISHED. RELEASED FOR PUBLICATION 20
© COPYRIGHT 20 BY TYCO ELECTRONICS CORPORATION. ALL RIGHTS RESERVED.

SET UP GAUGE	LOC	DIST
2119599-1	A	66

REVISIONS

P	LTR	DESCRIPTION	DATE	DWN	APVD
	-	SEE SHEET 1	-	-	-

PACIFIC VERSION TERMINATOR INTERFACE ADAPTER	PART NUMBER	REVISION	DESCRIPTION	FEED TYPE
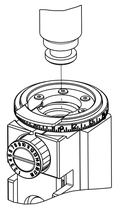	2-2266655-2	A	FINE CRIMP HEIGHT ADJUST	PNEUMATIC
	2-2266655-5	A	FINE CRIMP HEIGHT ADJUST	SERVO LATCH PLATE 4
	2-2266655-7	A	FINE CRIMP HEIGHT ADJUST	NONE
	7-2266655-7	A	CRIMP TOOLING KIT	-

APPLICATOR STYLE CONVERSION CHART

CONVERT TO	PART NUMBERS REQUIRED					
-	-	-	-	-	-	-
SERVO LATCH PLATE	2119951-1	-	8-2266655-5	1901094-3	-	2168400-6 (QUANTITY 2)
SMART APPLICATOR	2161326-1	-	8-2266655-4	-	-	-
-	-	-	-	-	-	-
PNEUMATIC FEED	2119950-1	1338685-3	5-18022-5	2119641-2	2119799-1	2063440-1
-	-	-	-	-	-	-
-	-	-	-	-	-	-

APPLICATOR DATA

CRIMP	SIZE	TYPE
WIRE	2.29 mm [.090]	F
INSUL	3.05 mm [.120]	OV

APPLICATOR INSTRUCTIONS 408-10389

TERMINAL DATA: TE TERMINAL — TE CRIMP SPECIFICATION

TERMINAL NAME: .187 FLAG FASTON RECEPTACLE

WIRE STRIP LENGTH	INSULATION DIAMETER RANGE	
4.26-5.02 mm [.168-.198 IN]	∅2.29-3.30 mm [.090-.130 IN]	
TERMINAL APPLICATION SPECIFICATION 571850-5	-	-
-	-	-

TERMINALS APPLIED 10

TE TERMINAL	TE TERMINAL	TE TERMINAL	TE TERMINAL
626412-1	626412-2	626412-3	

WIRE SIZE	CRIMP HEIGHT mm [INCH]	CRIMP HEIGHT REFERENCE SETTING 9
1.50mm2	1.50+/-0.05 [.059+/-.002]	6.3
16 AWG	1.42+/-0.05 [.056+/-.002]	7.4
1.00mm2	1.32+/-0.05 [.052+/-.002]	8.3
18 AWG	1.24+/-0.05 [.049+/-.002]	9.3
0.75mm2	1.22+/-0.05 [.048+/-.002]	9.5
20 AWG	1.14+/-0.05 [.045+/-.002]	10.1
0.50mm2	1.14+/-0.05 [.045+/-.002]	10.1

*WARNING
ON INSTALLATION, SET WIRE DISC, ITEM 40 TO LARGEST WIRE SIZE SETTING. USE OF SETTINGS BELOW MINIMUM REQUIRED CRIMP HEIGHT SETTING WILL CAUSE DAMAGE TO CRIMP TOOLING.

1. RECOMMENDED SPARE PARTS
2. GREASE BEARING SURFACES LIGHTLY
3. LUBRICATE DAILY PER THE APPLICATOR INSTRUCTION SHEET SUPPLIED WITH THE APPLICATOR.
4. APPLICATOR SPECIFIC DATA TO BE ENTERED INTO BLANK MEMORY CHIP AT ASSEMBLY. SEE BELOW FOR PART NUMBER:
   PNEUMATIC FEED WITH "SMART APPLICATOR" CONVERSION: 8-2266655-4
   SERVO FEED WITH "FINE CRIMP HEIGHT ADJUST": 8-2266655-5
5. ADJUSTMENT OF THE STRIPPER MAY BE REQUIRED WHEN MOVING THE APPLICATOR BETWEEN BENCH AND LEADMAKER APPLICATIONS.
6. APPLY PART NUMBER 1-23419-5 LOCTITE TO THREADS OF ITEMS 62. APPLY PART NUMBER 2-23419-6 LOCTITE TO THREADS OF ITEM 242.
7. GREASE THREADS, GROOVE AND O-RING ON ITEMS 139 & 152.
8. MAGNET MUST BE ORIENTED CORRECTLY IN ORDER TO PROPERLY ACTUATE THE COUNTER.
9. CRIMP HEIGHT REFERENCE SETTING WAS THE SETTING USED WHEN THE APPLICATOR WAS QUALIFIED AT THE FACTORY. ADJUSTMENT MAY BE NECESSARY WHEN RUNNING APPLICATOR IN THE FIELD.
10. TERMINAL PITCH NOT COMPATIBLE WITH MECHANICAL FEED.
11. TO CONVERT THE APPLICATOR TO A NON-CARRIER CUTTING STYLE, REMOVE ITEM 13 AND ATTACH TO THE LOCATION ON BACK SIDE OF THE HOUSING. REFER TO INSTRUCTION SHEET FOR ADDITIONAL INFORMATION.
12. CUT TO LENGTH AT ASSEMBLY.
13. QUANITY OF ITEM 129 IS IN METERS.

-77	-27	-25	-22	PART NO	DESCRIPTION	ITEM NO
-	2	2	2	2168083-1	SCR, SKT HD CAP, RoHS, M3 X 8.0	269
-	1	1	1	1633782-3	FENCE	267
-	1	1	1	2119782-1	FINE ADJUST HEAD ASM, PACIFIC STYLE	251
-	-	-	1	2119640-1	PUSH ROD, AIR FEED	250
-	-	-	1	2079988-1	BUSHING, LCH5-12, MISUMI	249
-	1	1	1	1-22279-3	SPRING, COMPRESSION	246

-77	-27	-25	-22	PART NO	DESCRIPTION	ITEM NO
-	1	1	1	2119082-2	CAM, SNAIL, INSULATION ADJUSTMENT	244
-	1	1	1	2079764-1	WASHER, WAVE SPRING, CREST-TO-CREST	243
6 -	1	1	1	2119083-1	RETAINER, INSULATION DIAL	242
-	-	2	-	2168400-6	SHCS, LOW HEAD, RoHS, M5 X 16	240
-	-	-	1	2063440-1	AIR FEED MODULE	238
-	-	1	-	2119740-2	TAG,IDENTIFICATION	213
-	-	1	-	1901094-3	SPACER, FEEDER	198
-	-	-	2	21045-3	RING, RETAIN, EXTERN, 3/16 CRESCENT	172
-	1	1	1	994969-1	MAGNET, RARE EARTH HIGH ENERGY	166
-	REF	REF	REF	994970-2	COUNTER, MAGNETIC	164
-	-	-	1	240638-1	SPRING, FEED FINGER	163
-	1	1	1	8-21084-1	O-RING, .801 ID, .070 DIA. MAT.	152
-	-	-	1	2119641-2	FEED CAM, AIR FEED	151
-	1	1	1	2119798-2	DETENT PIN	145
-	1	1	1	2079383-8	SCR, BHSC, RoHS (M4 X 16)	144
-	1	1	1	2168083-8	SCR, SKT HD CAP, RoHS, M4 X 16	143
-	1	1	1	1-2119656-0	APPLICATOR BASIC ASSEMBLY, SF	141
-	1	1	1	2119650-1	RAM, ASIAN STYLE, SIDE FEED	140
-	1	1	1	2119092-2	BOLT, ADJUSTMENT	139
-	-	-	1	3-23627-7	PIN, RETAIN, GRVD, 3/16 X .854	137
-	-	-	1	2119799-1	HOLDER,FEED FINGER, AF	136
-	-	REF	-	SEE NOTE 4	MEMORY CHIP, PROGRAMMED	135
-	-	1	-	1633743-1	SERVO FEED LATCH ASM	133
-	1	1	1	2217068-1	BRACKET, AIR BLAST	130
13 -	-	-	0.5m	2030758-3	TUBING, POLYURETHANE	129
-	1	1	1	5018030-2	NUT, HEX, REG, RoHS, M4	128
-	1	1	1	2168083-3	SCR, SKT HD CAP, RoHS, M4 X 12.0	127
-	1	1	1	986220-3	CLAMP, CABLE, BLACK	126
-	1	1	1	1-22281-8	SPRING, COMPRESSION	121
-	1	1	1	455888-1	SPACER, CRIMPER	120
-	-	REF	-	2119944-1	FEED FINGER ASSEMBLY,SF	117
-	1	1	1	23238-1	INSERT, COUPLING	101
-	1	1	1	3-690712-4	FRONT STRIP GUIDE	96
-	2	2	2	1-2168083-3	SCR, SKT HD CAP, RoHS, M3 X 16	95
-	1	1	1	2168083-6	SCR, SKT HD CAP, RoHS, M5 X 65	93
-	1	1	1	2-455888-8	SPACER, CRIMPER	82
-	1	1	1	2119956-1	DOCUMENTATION PACKAGE	71
-	1	-	1	2119740-1	TAG,IDENTIFICATION	67
-	2	2	2	2168078-1	SCREW, DRIVE, RH, RoHS, 2 x .188	66
-	1	1	1	2119793-1	LIMITER, ADJUSTMENT BOLT	63
6 -	3	3	3	992763-5	SCR, SET, SOC, CONE POINT, M3 x 4.0	62
-	2	2	2	2-18032-5	SCR, SET, FLT POINT M5 X 20.0	61
-	-	-	1	5-18022-5	SCR, HEX HD CAP, M4 X 6.0	59
-	-	-	1	1338685-3	PAWL, FEED	56
-	-	-	1	18023-9	SCR, SKT HD CAP M4 X 6.0	49
-	1	1	1	2079383-7	SCR, BHSC, RoHS (M8 X 25)	41
-	1	1	1	2119645-1	DISC, NUMBERED FA WIRE ADJUSTMENT	40
-	1	1	1	2119957-1	APPLICATOR SHIM PACK	39
-	1	1	1	1-2119644-2	RAM WASHER, PRECISION	38
-	2	2	2	2079383-5	SCR, BHSC, RoHS (M4 X 20)	33
-	1	1	1	2161328-1	HEX HEAD, FLANGED, M5 x 8mm LONG	32
-	1	1	1	1-1320908-3	SPACER, STRIP GUIDE	30
-	1	1	1	1-1901086-9	PLATE, STRIP GUIDE	29
-	1	1	1	2119791-5	DEPRESSOR, WIRE	28
-	2	2	2	22281-6	SPRING, COMPRESSION	27
-	1	1	1	356835-1	LEVER, DRAG RELEASE	26
-	1	1	1	6-690754-9	DRAG, SPECIAL	25
-	1	1	1	5-690440-4	GUIDE, REAR STRIP	24
-	1	1	1	980371-4	SCR, SKT HD SHLDR 5.0 DIA X 6.0	23
-	1	1	1	2168083-2	SCR, SKT HD CAP, RoHS, M4 X 8.0	21
-	4	4	4	1-18028-2	WASHER, FLAT, REG M4	20
-	1	1	1	2119533-6	STRIPPER, SIDE FEED	19
1 -	1	1	1	3-853720-8	BLADE, SLUG	15
1 -	1	1	1	1-853721-8	BLADE, SLUG	10
1 -	1	1	1	2-1803012-9	PLATE, REAR SHEAR	9
1 1	1	1	1	1803010-4	ANVIL, SPCEIAL, COMBINATION	8
-	-	-	-	-	-	7
-	-	-	-	-	-	6
-	-	-	-	-	-	5
-	1	1	1	238009-1	BLOCK, FL CRIMPER SPACER	4
1 1	1	1	1	1803208-7	CRIMPER, INSULATION OVERLAP PREMIUM	3
-	1	1	1	455888-1	SPACER, CRIMPER	2
1 1	1	1	1	8-456406-0	CRIMPER, WIRE PREMIUM	1

PACIFIC VERSION

Shown on sheets 3 of 4 & 4 of 4
(Atlantic version shown on sheets 1 of 4 & 2 of 4)

THIS DRAWING IS A CONTROLLED DOCUMENT FOR TYCO ELECTRONICS CORPORATION IT IS SUBJECT TO CHANGE WITHOUT NOTICE. ALL PARTIES TO THIS ORGANIZATION SHOULD BE CONTACTED FOR THE LATEST REVISION.

DWN	K.HUANG	20JAN2015
CHK	L.ZHANG	20JAN2015
APVD	U.GUO	20JAN2015

DIMENSIONS: mm

TOLERANCES UNLESS OTHERWISE SPECIFIED:
0 PLC ±-
1 PLC ±0.5
2 PLC ±0.13
3 PLC ±0.013
4 PLC ±0.0001
ANGLES ±-

MATERIAL - -
FINISH - -

PRODUCT SPEC -
APPLICATION SPEC -
WEIGHT -

TE Connectivity
Harrisburg, PA 17105-3608

NAME: Ocean Side Feed Applicator -

SIZE	CAGE CODE	DRAWING NO	RESTRICTED TO
A1	00779	C-2266655	-

Customer Accessible Production Drawing | SCALE 1:2 | SHEET 3 OF 4 | REV A

SHEETS 1 & 2 ARE NOT REQUIRED FOR PACIFIC VERSION

THIS DRAWING IS UNPUBLISHED. RELEASED FOR PUBLICATION 20
© COPYRIGHT 20 BY TYCO ELECTRONICS CORPORATION. ALL RIGHTS RESERVED.

LOC	DIST
A	66

REVISIONS

P	LTR	DESCRIPTION	DATE	DWN	APVD
	-	SEE SHEET 1	-	-	-

FEED TYPE

PNEUMATIC

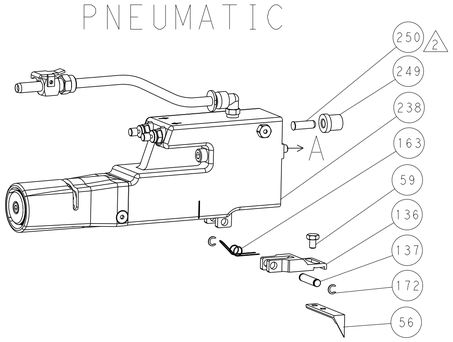

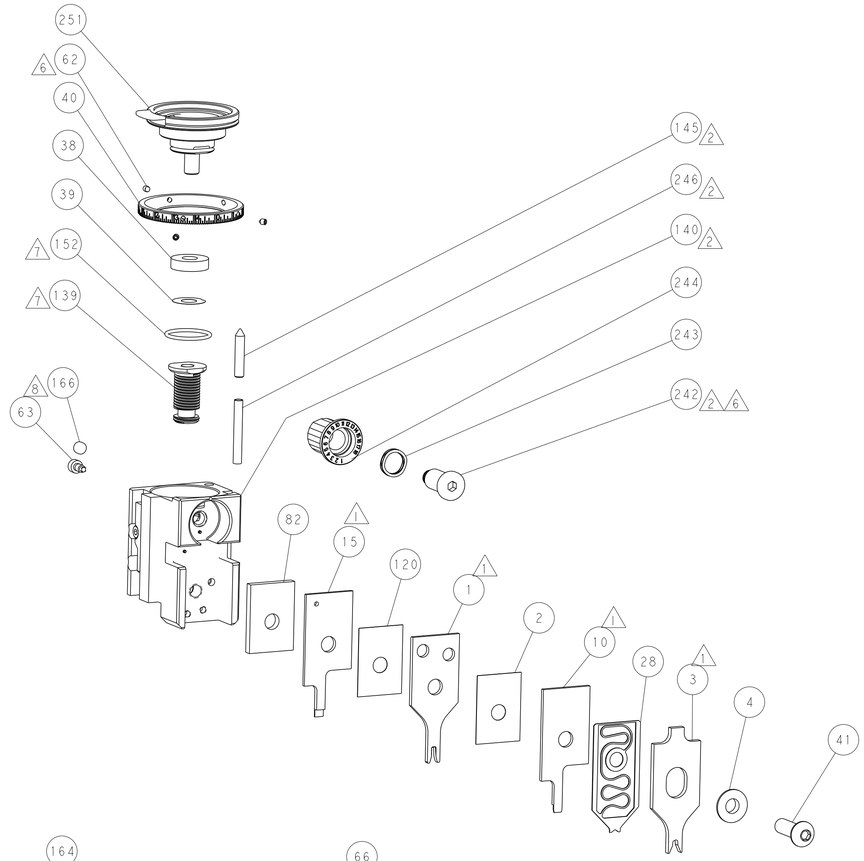

SERVO LATCH PLATE

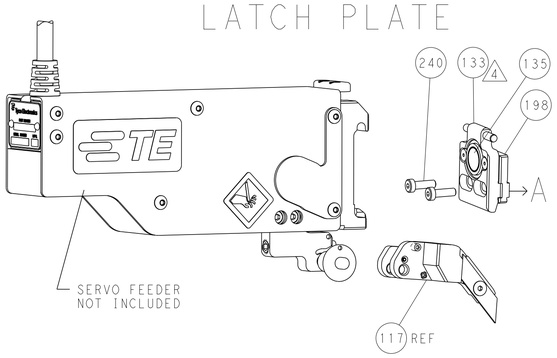

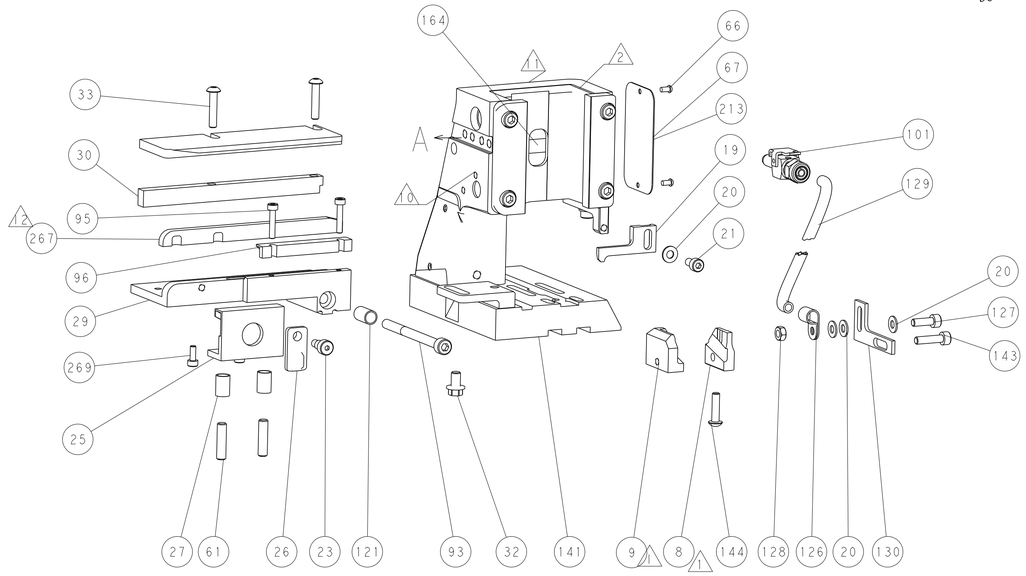

CAM POSITION

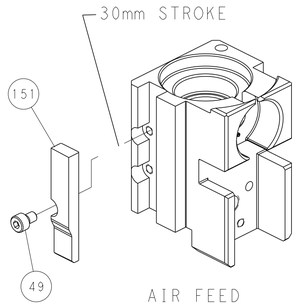

AIR FEED

ITEM 30 LOCATED AT
FRONT HOLES

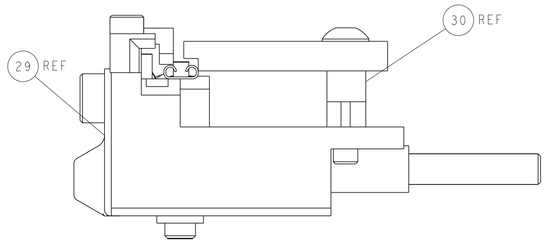

FEED TRACK POSITION
GUIDE BY BODY

PACIFIC VERSION

Shown on sheets 3 of 4 & 4 of 4
(Atlantic version shown on sheets 1 of 4 & 2 of 4)

THIS DRAWING IS A CONTROLLED DOCUMENT FOR TYCO ELECTRONICS CORPORATION. IT IS SUBJECT TO CHANGE. THE PROPERTY MANAGEMENT INDUSTRIAL ORGANIZATION SHOULD BE CONTACTED FOR THE LATEST REVISION.

DWN	K. HUANG	20JAN2015
CHK	L. ZHANG	20JAN2015
APVD	U. GUO	20JAN2015

TE Connectivity
Harrisburg, PA 17105-3608

DIMENSIONS: mm

TOLERANCES UNLESS OTHERWISE SPECIFIED:

0 PLC	± -
1 PLC	±0.5
2 PLC	±0.13
3 PLC	±0.013
4 PLC	±0.0001
ANGLES	± -

MATERIAL - -

FINISH - -

PRODUCT SPEC -

APPLICATION SPEC -

WEIGHT -

NAME: Ocean Side Feed Applicator -

SIZE	CAGE CODE	DRAWING NO	RESTRICTED TO
A1	00779	C-2266655	-

Customer Accessible Production Drawing | SCALE 1:2 | SHEET 4 OF 4 | REV A

AMP 4805 REV 31MAR2000

SHEETS 1 & 2 ARE NOT REQUIRED FOR PACIFIC VERSION