© 2022 TE Connectivity. All Rights Reserved.

REVISIONS					
P	LTR	DESCRIPTION	DATE	DWN	APVD
	H3	REVISED PER ECR-25-259359	07NOV2025	MDP	DR

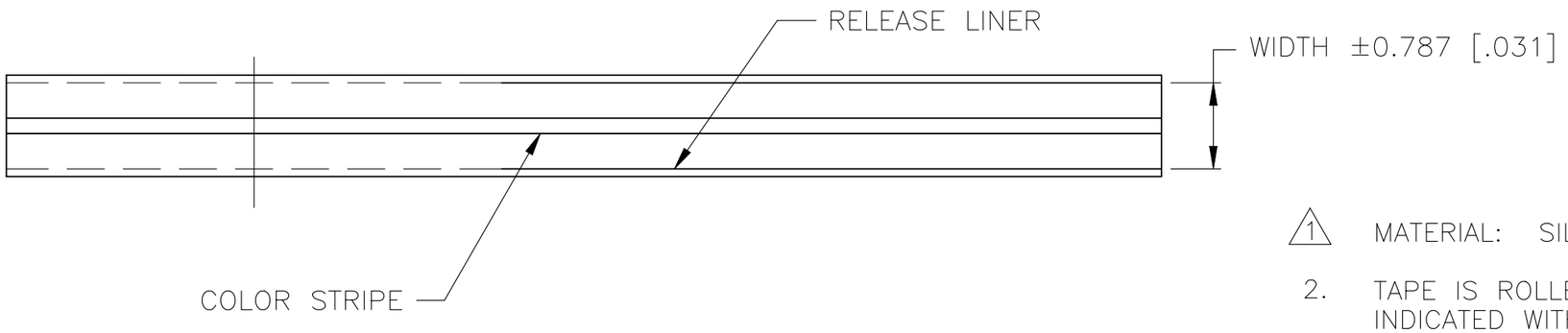

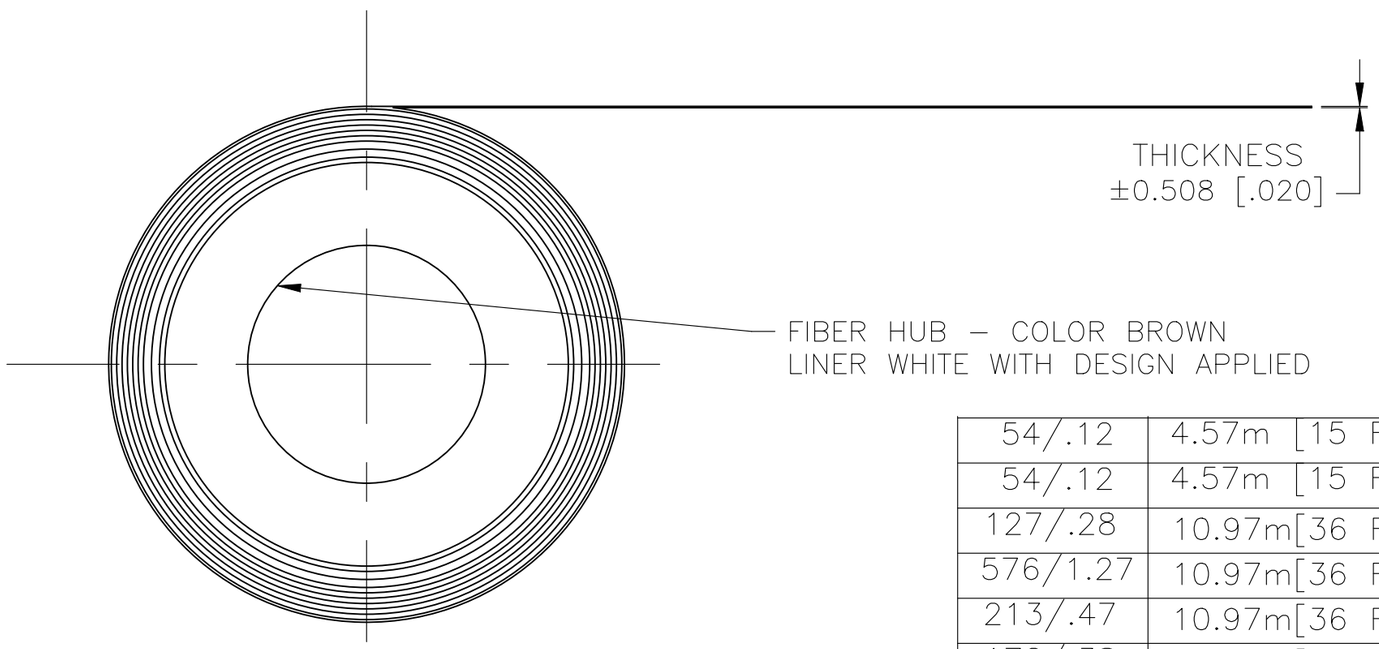

1. MATERIAL: SILICONE RUBBER.
2. TAPE IS ROLLED ONTO A FIBER HUB TO LENGTHS INDICATED WITH COLOR STRIPE UP AND RELEASE LINER ON OUTSIDE.
3. THICKNESS TO BE MEASURED AT CENTER OF TAPE.
4. SELF-AMALAGAMATING MATERIAL HAS A 2-YEAR SHELF-LIFE, WHICH BEGINS THE DAY ITS MADE. USE AFTER EXPIRATION CONSIDERABLY IMPEDES ITS ABILITY TO FUSE.
5. MADE IN USA DESIGN ON WHITE BACKING

WEIGHT GRAMS/POUNDS	LENGTH MINIMUM	STRIPE COLOR	TAPE COLOR	THICKNESS	WIDTH	PART NUMBER
54/.12	4.57m [15 FT]	WHITE	BLACK	0.51 [.020]	25.4 [1.00]	1-608036-4
54/.12	4.57m [15 FT]	BLUE	RED	0.51 [.020]	25.4 [1.00]	1-608036-3
127/.28	10.97m[36 FT]	BLUE	CLEAR	0.51 [.020]	25.4 [1.00]	1-608036-2
576/1.27	10.97m[36 FT]	WHITE	RED	1.50 [.060]	38.1 [1.50]	608036-9
213/.47	10.97m[36 FT]	GREEN	RED	1.02 [.040]	25.4 [1.00]	608036-5
172/.38	10.97m[36 FT]	WHITE	GRAY	0.76 [.030]	25.4 [1.00]	608036-4
127/.28	10.97m[36 FT]	BLUE	GRAY	0.51 [.020]	25.4 [1.00]	608036-2
127/.28	10.97m[36 FT]	BLUE	RED	0.51 [.020]	25.4 [1.00]	608036-1

THIS DRAWING IS A CONTROLLED DOCUMENT.

DIMENSIONS: mm[INCHES]

TOLERANCES UNLESS OTHERWISE SPECIFIED:
0 PLC ±
1 PLC ±
2 PLC ±
3 PLC ±
4 PLC ±
ANGLES ±

MATERIAL 1

FINISH

DWN S. HOOVER 20-AUG-2002
CHK D. COLEY 20-AUG-2002
APVD D. COLEY 20-AUG-2002
PRODUCT SPEC
APPLICATION SPEC
WEIGHT –

TE Connectivity

NAME TAPE, SILICONE FUSION

SIZE	CAGE CODE	DRAWING NO	RESTRICTED TO
A3	00779	C-608036	–

CUSTOMER DRAWING

SCALE – SHEET 1 OF 1 REV H3