Part Number: 0358431227
Status: Active
Overview: Automotive Bulb Sockets
Description: PT Bulb Socket Single Housing Assembly, Type C, P21W, Sealed, Brown

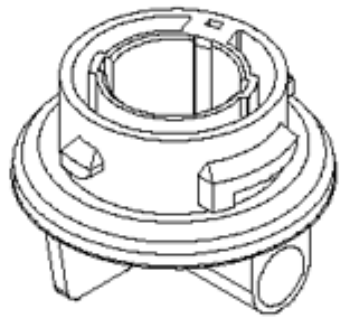

Series image - Reference only

Documents:
3D Model
Drawing (PDF)
Packaging Specification PK-35843-001-001 (PDF)
RoHS Certificate of Compliance (PDF)

General	
Product Family	Other Sockets
Series	35843
Comments	C-Type, C-Type
Component Type	Socket
Overview	Automotive Bulb Sockets
Product Name	PT Bulb Socket
UPC	822348134274
Physical	
Circuits (Loaded)	2
Circuits (maximum)	2
Color - Resin	Brown
Durability (mating cycles max)	Contact Molex
Entry Angle	Vertical
Keying to Mating Part	None
Material - Resin	Nylon
Net Weight	10.698/g
PCB Locator	No
PCB Retention	N/A
Packaging Type	Bag
Pitch - Mating Interface	N/A
Temperature Range - Operating	-40° to +85°C
Termination Interface: Style	Through Hole
Electrical	
Current - Maximum per Contact	7.0A
Voltage - Maximum	12V
Material Info	
Reference - Drawing Numbers	
Packaging Specification	PK-35843-001-001
Sales Drawing	SD-35843-003

EU ELV
Compliant

EU RoHS
Compliant

China RoHS

REACH SVHC
Not Contained Per -ED/88/2018 (15 January 2019)

Halogen-Free Status
Not Relevant

For more information, please visit Contact US

China ROHS	Not Relevant
ELV	Compliant
RoHS Phthalates	Not Contained

Search Parts in this Series
35843 Series

Mates With
Bayonet Base Bulb

Use With
Positive Terminal for PT Bulb Socket 354648000
Earth Terminal for PT Bulb Socket 354658000
Positive Wire Seal 359030096
Earth Wire Seal 359030106